Anatomy of a Patent Case

prepared by the

Complex Litigation Committee
of the
American College of Trial Lawyers

Federal Judicial Center
2009

The Federal Judicial Center is printing this publication with the permission of the American College of Trial Lawyers for distribution to judges and employees of the federal judicial branch. The Center undertook this publication in furtherance of its statutory mission to develop and conduct education programs for the judicial branch. The views expressed are those of the authors and not necessarily those of the Federal Judicial Center.

American College of Trial Lawyers
1900 MacArthur Boulevard, Suite 610
Irvine, California 92612
Telephone: (949) 752-1801
Facsimile: (949) 752-1674
E-mail: nationaloffice@actl.com
Website: www.actl.com

Copyright © 2009
American College of Trial Lawyers
All Rights Reserved.

Contents

Preface, ix
American College of Trial Lawyers' Statement of Purpose, xi
Introduction and Overview of a Patent Lawsuit, 1
Chapter 1: The Pizza Box Case—Anatomy of a Case for Patent Novices, 5
A. The Patent, 5
B. Patent Terms, 6
C. Pleadings and Motions, 8
D. Patent Reexamination, 9
E. Discovery, 9
F. Claim Construction, 10
1. Plaintiff Vitale's claim construction arguments, 12
2. Defendant PizzaBoxCo's argument, 19
G. Summary Judgment Motions, 23
H. Trial, 23
I. Reproduction of Vitale Patent, 25
Chapter 2: The Complaint, 29
A. Pleading Infringement, 29
1. Direct infringement, 29
2. Induced infringement, 29
3. Contributory infringement, 30
4. Infringement of drug patents, 30
5. Infringement for supplying components for assembly into a patented product outside of the United States, 31
6. Infringement by a product made outside the United States of a U.S. patent covering a process, 32
7. Willfulness, 32
B. Pleading Damages and Other Remedies, 33
1. Compensatory damages, 33
2. Enhanced damages, 33
3. Injunctions, 33
4. Attorneys' fees, 34

Chapter 3: Motions to Dismiss, to Transfer, to Strike, 35
A. Motion to Dismiss, 35
1. Lack of subject-matter jurisdiction—Fed. R. Civ. P. 12(b)(1), 35
2. Failure to join a necessary party—Fed. R. Civ. P. 12(b)(7), 19, 37
3. Lack of personal jurisdiction—Fed. R. Civ. P. 12(b)(2), 38
a. Personal jurisdiction generally, 38
b. Standard for personal jurisdiction under Federal Circuit law, 38
c. Exercise of jurisdiction based on extraterritorial conduct, 39
4. Improper venue—Fed. R. Civ. P. 12(b)(3), 40
5. Motion to dismiss for failure to state a claim upon which relief may be granted—Fed. R. Civ. P. 12(b)(6), 41
B. Motion to Strike, 41
1. Inequitable conduct, 41
a. Standard, 41
b. Timing, 42

Chapter 4: Answer and Counterclaims, 43
A. Affirmative Defenses, 43
1. Invalidity of the patent, 43
a. Section 101, 43
b. Section 102, 44
c. Section 103, 45
d. Section 112, 45
e. Other matters relating to an invalidity defense, 45
2. Inequitable conduct in obtaining the patent, 46
3. License or implied license, 47
4. Limitations on damages, 48
5. Equitable defenses: laches and estoppel, 48
a. Laches, 48
b. Equitable estoppel, 49
6. Patent misuse, 50
B. Counterclaims, 51
1. Antitrust counterclaims, 51
2. Unfair competition claims, 52
3. Tortious interference claims, 52

4. Declaratory judgment of noninfringement, invalidity, or unenforceability, 53

Chapter 5: Preliminary Injunction Motions, 55
- A. Likelihood of Success on the Merits, 55
  1. Infringement, 55
  2. Invalidity, 56
- B. Irreparable Harm, 56
- C. Balance of Hardships, 57
- D. Public Interest, 57

Chapter 6: The Case-Management Conference, 59
- A. Conference Checklist, 59
- B. Local Rules, 64

Chapter 7: Discovery Issues Unique to Patent Cases, 65
- A. Scheduling Considerations, 65
- B. Disclosure of Infringement and Invalidity Contentions and Claim Construction Issues, 65
  1. Patentee's infringement contentions, 65
  2. Accused infringer's invalidity contentions, 66
  3. Parties' contentions regarding contested claim interpretation issues, 66
- C. Relevance and Limits of Discovery, 67
- D. Attorney–Client Privilege and Waiver Issues, 67
  1. Questions of what qualifies as privileged, 68
  2. Waiver—its scope and effect, 68
  3. The timing issue, 68
- E. Summary of the Discovery Order and Timing Suggested by Patent Rules, 69

Chapter 8: Claim Construction—The *Markman* Hearing, 71
- A. General Principles, 71
- B. Key Elements in Claim Construction, 71
  1. Claims, 71
     - a. Independent v. dependent claims, 72
     - b. Means-plus-function or step-plus-function claims, 72
  2. Intrinsic evidence, 73
- C. Timing of Claim Construction, 73
- D. Issues to Consider During a Claim Construction Hearing, 74

E. Evidence to Consider When Construing Patent Claim Terms, 74
1. Use of intrinsic evidence in construing claim terms, 75
2. Use of extrinsic evidence in construing claim terms, 76
F. Appeal of a Claim Construction Ruling, 77

Chapter 9: Summary Judgment Motions, 79
A. Applying the Summary Judgment Standard to Burdens of Proof in Patent Litigation, 79
1. Summary judgment of infringement/noninfringement, 80
2. Summary judgment of validity/invalidity, 82
3. Summary judgment of unenforceability, 86
B. Timing of Summary Judgment Motions, 88
1. Where not all claims have been construed, 88
2. After all claims have been construed through a formal *Markman* hearing, 89
3. Combining *Markman* and summary judgment, 90
C. Evidence to Support or Oppose Summary Judgment, 90
1. Expert evidence supporting summary judgment, 90
2. Expert evidence opposing summary judgment, 91
D. Appealability of Partial Summary Judgment, 93

Chapter 10: Pretrial Issues and Motions In Limine, 95
A. Separation of Issues for Trial, 95
1. Inequitable conduct from case in chief, 96
2. Willfulness from liability, 96
3. Liability from damages, 97
4. Infringement from invalidity, 98
5. Antitrust from patent issues, 98
B. Time Limits at Trial, 99
C. Motions In Limine, 100
1. Inventor testimony, 100
2. *Daubert* and expert testimony, 101
a. Limitations relating to inadequate, untimely, or lack of disclosure, 101
b. Limitations on expert testimony on willfulness, 102
c. Limitations on expert testimony regarding PTO procedures, 102
3. Comparison of accused product with embodiments of patent, 103
4. Commercial success of the patented invention, 104

5. Finding of validity of same patent in other litigation, 104
6. Reference to reissue or reexamination proceedings, 105
7. Use of the word "monopoly" 105
8. Evidence of foreign patents and proceedings, 106
9. Evidence related to decisions for the court, 106

Chapter 11: Trial, 109
A. Pretrial Order, 109
B. Selecting the Jury, 109
C. Use of Jury Notebooks, 110
D. Opening Statements and Burdens of Proof, Preliminary Jury Instructions, 111
E. Presentation of the Evidence, 113
1. Infringement, 114
2. Validity, 115
3. Inequitable conduct and other counterclaims, 115
4. Damages, 116
F. Closing Arguments, 117
G. Instructions to the Jury, 117

Chapter 12: Posttrial Proceedings, 119
A. Motions for Judgment as a Matter of Law and New Trial, 119
B. Inequitable Conduct, 119
C. Damages, 121
1. Supplemental damages, 121
2. Prejudgment interest, 122
3. Enhancing damages—35 U.S.C. § 284, 123
4. Attorneys' fees—35 U.S.C. § 285, 124
D. Injunctions, 126

Chapter 13: The Appeal, 129
A. Federal Circuit Jurisdiction, 129
1. Cases "arising under the patent laws" 129
a. Implication of federal patent law, 130
b. Patent law defense does not "arise under" 131
c. Patent claim is part of original complaint, 132
d. Patent claim added by amendment, 132
e. Effect of dismissal, 133
f. Mootness, 133

2. Jurisdiction over other claims brought with patent claim, 133
   a. Supplemental jurisdiction—28 U.S.C. § 1367, 133
   b. Supplemental jurisdiction over foreign patent claims, 134
   c. Unfair competition claims—28 U.S.C. § 1338(b), 134
   d. Patent infringement counterclaims, 135
   e. Patent declaratory judgment claims, 135
   f. No jurisdiction over ownership or licensing disputes, 136
   g. Transfer of appeals to regional circuit, 137
3. Finality requirement, 137
   a. Final decision rule, 137
   b. Final but for an accounting—28 U.S.C. § 1292(c)(2), 137
   c. Final but for an award of attorneys' fees or costs, 137
   d. Rule 54(b) certification, 137
   e. Injunctions and stay orders, 138
   f. Certified questions, 138

B. Standards of Review, 139
C. Governing Law, 141
D. Remand, 141

Preface

Conflicts over intellectual property, and specifically over patents, have assumed a pivotal role in the world economy. Fred Warshofsky, in his 1994 book *The Patent Wars*, wrote:

> In the war for global economic dominance, the fiercest battles today are over intellectual property. Where nations once fought for control of trade routes and raw materials, they now fight for exclusive rights to ideas, innovations, and inventions. The battlefields in this bloodless war are the world's courts, where billions of dollars are won and lost each year through patent litigation. Beyond licensing fees and individual companies' rights to manufacture specific products, what is at stake is the ultimate control of key high-tech industries such as biotechnology, electronics, and communications.

Legislation proposing significant patent law reform was considered by the Congress in the last few years for the first time since 1952, the last time significant changes were enacted to the patent statute.

Judgments and settlements in favor of patent holders routinely amount to millions of dollars and recently have even reached the one billion dollar mark. Injunctions are often sought, and sometimes these injunctions command wide public attention, as evidenced by the 2003 Research in Motion (RIM) litigation where the patent holder prevailed and Blackberry users faced the real possibility that an injunction would be entered that would have disrupted the continued use of those devices.

Against this background, the Complex Litigation Committee of the American College of Trial Lawyers (ACTL) was charged in 2005 with drafting a manual detailing a patent case for the purpose of informing judges and lawyers not familiar with patent litigation of commonly used practices in this area of the law. Our intention was to prepare a concise, narrative summary of the steps required to bring a patent case to trial and of the key elements of such litigation.

This idea originated with a suggestion by ACTL Judicial Fellow the Honorable Garr M. (Mike) King and was endorsed by former ACTL President David W. Scott and the Regents of the College. The Committee formed a Working Group consisting of members of the Complex Litigation Committee, other members of the College, and other experi-

enced patent practitioners. Working Group members reviewed the many published treatises on patent litigation and determined that none addressed the issues in the form of a concise guide to patent litigation for trial judges and lawyers. The object of this manual is to offer suggestions as to how judges and lawyers may deal with some of the procedural problems presented in patent litigation. We hope that this manual will add to the resources currently available.

The Committee would like to acknowledge the efforts of the following members of the Working Group who contributed to this project: George E. Bowles, Christine W.S. Byrd, Joseph A. Calvaruso, Steven Cherny, Morgan Chu, John L. Cooper, Ford F. Farabow, Jr., Lawrence B. Goodwin, Michael Graif, Robert J. Gunther, Jr., Roy W. Hardin, George F. Pappas, Michael O. Warnecke, and Ken S. Weitzman. The Editorial Committee, chaired by George F. Pappas and ably assisted by John L. Cooper and Morgan Chu, blended the several chapters into a condensed text.

The Committee owes special thanks to the following judges who reviewed our draft outline and provided meaningful suggestions: District Judges William H. Alsup, P. Kevin Castel, David J. Folsom, Garr M. (Mike) King, Kathleen M. O'Malley, James L. Robart, Fern M. Smith, Sam Sparks, Thomas John Ward, and Ronald M. Whyte, Third Circuit Judge Kent A. Jordan, Federal Circuit Chief Judge Paul R. Michel, and Federal Circuit Senior Judge S. Jay Plager.

The project would have been impossible without the assistance and support of several past Presidents of the College, including David W. Scott, James W. Morris III, Michael A. Cooper, David J. Beck, and Mikel L. Stout, and current President John J. (Jack) Dalton.

The American College of Trial Lawyers' Statement of Purpose is included below.

John Nyhan
Chair

George F. Pappas
Vice Chair

Complex Litigation Committee
American College of Trial Lawyers

American College of Trial Lawyers' Statement of Purpose

The American College of Trial Lawyers, founded in 1950, is composed of the best of the trial bar from the United States and Canada. Fellowship in the College is extended by invitation only, after careful investigation, to those experienced trial lawyers who have mastered the art of advocacy and those whose professional careers have been marked by the highest standards of ethical conduct, professionalism, civility, and collegiality. Lawyers must have a minimum of 15 years' experience before they can be considered for Fellowship. Membership in the College cannot exceed 1% of the total lawyer population of any state or province. Fellows are carefully selected from among those who represent plaintiffs and those who represent defendants in civil cases; those who prosecute and those who defend persons accused of crime. The College is thus able to speak with a balanced voice on important issues affecting the administration of justice. The College strives to improve and elevate the standards of trial practice, the administration of justice and the ethics of the trial profession.

Blank pages inserted to preserve pagination when printing double-sided copies.

Introduction and Overview of a Patent Lawsuit[1]

A patent lawsuit usually involves complex technical and legal issues not found in other types of civil litigation. It is to these differences that this book is addressed. Indeed, we have endeavored to keep this book short by focusing only on the unique characteristics of patent cases that judges and lawyers can expect.

A patent is a grant by the government, pursuant to Article I, section 8, clause 8 of the U.S. Constitution, that gives the patent owner the exclusive right to make, use, offer for sale, sell, and import the invention described in the patent.[2] The patent term typically lasts twenty years from the date on which the patent application, or an earlier application on which the patent application relies, was filed.[3] In order to qualify for a patent, an invention must be new, useful, and not obvious based on what a person skilled in the field of the invention knew at the time of the invention.[4] The inventor must also describe to persons skilled in the art how to use the invention, and he or she must disclose the best mode known to him or her for using or "practicing" the invention.[5]

To obtain any patent, the inventor must file a patent application with the United States Patent and Trademark Office (PTO). Many statutes, regulations, and procedures govern the content and style of the patent application and the examination process.[6] Once an application is filed at the PTO, it is assigned to a patent examiner in the appropriate field who reviews the claims to ensure that they are new and unobvious to a person skilled in the art—this review is based on other patents or publications in the field that were publicly known before the patent application was filed, known as "prior art." The applicant and any others involved in the prosecution of the patent have a duty of candor before the PTO to provide all information known to them that

---

1. George F. Pappas, Covington & Burling LLP, Washington, D.C. The assistance of Kevin B. Collins and Scott C. Weidenfeller in preparing this material is greatly appreciated.

2. *See* 35 U.S.C. § 271(a) (2000).

3. *See id.* § 154(a)(2).

4. *See id.* §§ 102, 103.

5. *See id.* § 112.

6. *See generally id.* §§ 111–135; 37 C.F.R. pt. 1 (2006); Manual of Patent Examining Procedure (8th ed., rev. 4, 2005).

is material to patentability,[7] and the examiner also conducts a search for prior art.

When examining the patent application, the examiner may find that one or more claims in the patent application are deficient and issue an "Office Action" explaining the deficiencies. The applicant may then amend the claims or argue that the examiner is incorrect.

Ultimately, the examiner issues a final rejection of the claims or allows some or all of the claims in the application to issue as a patent. Once the patent issues, all of the correspondence between the examiner and the applicant is made public in a file known as the "file history" or the "prosecution history."

To enforce the patent against others who make, use, offer to sell, sell, or import an invention claimed in the patent without the patentee's authorization, the patentee can license rights under the patent or sue an unauthorized party for infringement of the patent.[8] The plaintiff in a patent suit is typically the patentee or the assignee of the patent, although the accused infringer may be the plaintiff in declaratory judgment cases where the patentee has accused it of infringement. The patentee typically seeks both money damages and an injunction, as well as awards of enhanced damages and attorneys' fees pursuant to 35 U.S.C. §§ 284 and 285 because of willful infringement.

Accused infringers almost always allege that the patent claims asserted against them are invalid for failure to comply with the patent laws, and they often allege that the patent is unenforceable because of the patentee's inequitable conduct in procuring the patent from the PTO by failing to comply with the duty of candor before the PTO.[9] The patentee or the accused infringer may request a jury trial if the patentee seeks damages, but the entire case, including any invalidity defenses or counterclaims, is tried to the bench if the patentee seeks only injunctive relief or abandons its claim for damages.[10] Some cases

---

7. *See* 37 C.F.R. § 1.56 (2006); *see also, e.g.,* Purdue Pharma L.P. v. Endo Pharms. Inc., 438 F.3d 1123, 1129 (Fed. Cir. 2006).

8. *See* 35 U.S.C. § 281 (2000).

9. *See, e.g.,* Ferguson Beauregard/Logic Controls v. Mega Sys., LLC, 350 F.3d 1327, 1344 (Fed. Cir. 2003); Fed. R. Civ. P. 9(b).

10. *In re* Tech. Licensing Corp., 423 F.3d 1286, 1291 (Fed. Cir. 2005); Tegal Corp. v. Tokyo Electron Am., Inc., 257 F.3d 1331, 1340–41 (Fed. Cir. 2001).

also involve mixed judge/jury issues, where some issues are tried to the bench and others are tried before a jury.

A fundamental issue in patent cases is claim construction, which is a matter of law "exclusively within the province of the court."[11] Both infringement and validity are two-step processes, requiring construction of the claims first and then application of the appropriately construed claims to the accused device or the prior art, respectively.[12] Claim construction thus gives meaning and scope to the claims. Although the court need not follow a particular formal process for claim construction, courts typically allow briefing and oral argument in a "*Markman* hearing" before issuing a claim construction order. Claim construction is described in further detail in Chapter 8.

Once the claims are construed, the parties often file motions for summary judgment of infringement or invalidity based on the claim construction (see Chapter 9). If the court denies summary judgment, the trial of the case also focuses on the claims as construed in the claim construction order. Staging of the pretrial proceedings; the trial or trials, if bifurcated; and posttrial proceedings are discussed in Chapters 10, 11, and 12, respectively.

Appeals under the patent laws are taken to the U.S. Court of Appeals for the Federal Circuit, not the regional circuits, but the regional circuits retain appellate jurisdiction where the patent law claims are brought only as counterclaims.[13]

---

11. Markman v. Westview Instrs., Inc., 517 U.S. 370, 372 (1996).

12. *See, e.g.*, Callicrate v. Wadsworth Mfg., Inc., 427 F.3d 1361, 1366 (Fed. Cir. 2005) (infringement); SIBIA Neurosciences, Inc. v. Cadus Pharm. Corp., 225 F.3d 1349, 1355 (Fed. Cir. 2000) (validity).

13. *See* Holmes Group, Inc. v. Vornado Circulation Sys., Inc., 535 U.S. 826, 827 (2002); *see also* 28 U.S.C. §§ 1295(a)(l), 1338(a) (2000).

Blank pages inserted to preserve pagination when printing double-sided copies.

Chapter 1: The Pizza Box Case—Anatomy of a Case for Patent Novices[14]

This chapter describes a hypothetical case for judges and lawyers who are new to patent litigation. The case is hypothetical, but the patent is real. There are differences and similarities between a patent case and other civil suits in federal court. The focus here will be on the important differences.

A. The Patent

In this case, Carmela Vitale owns a patent. Vitale's patent is entitled "Package Saver." The patent is short, a total of three pages. The patent tries to solve a problem for pizza delivery boxes: The top cover of a pizza box sags into the hot cheese. The invention is a small plastic device that sits on top of the pizza and holds up the box cover so that it will not sag. Figures 1 and 2 from the patent show this best. The annotations for each number in the figures are added, but they come from the body of the patent.

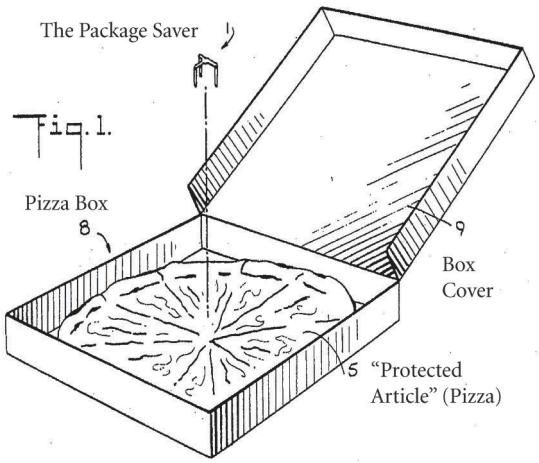

14. Morgan Chu, Irell & Manella LLP, Los Angeles, California.

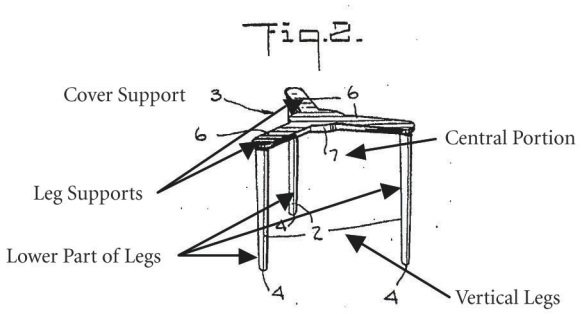

B. Patent Terms

The Vitale patent is reproduced at the end of this chapter (section I). The first page of a patent has some basic information. The Vitale patent application was filed February 10, 1983. On many patents, there is also a statement of earlier filing dates for related applications. The earliest filing date is often the date claimed by the inventor as his or her "priority date." The priority date is used to decide what articles, patents, and devices known to the public can be used as prior art to determine whether the patent is new and nonobvious over the prior art.

Vitale's patent was issued February 12, 1985, two years after the application. This is not unusual. Most patent applications take two or more years before they are issued.

The Vitale patent number is 4,498,586. This means it is the 4,498,586th patent issued in the United States since the first head of the patent office, Thomas Jefferson, issued the first U.S. patent. As a matter of convenience, people dealing with patents often use the last three digits of the patent number to refer to a specific patent, so people commonly refer to the Vitale patent as the '586 patent.

The "claims," which appear at the end of a patent, define the invention. Claims are granted by the U.S. Patent Office. Claims are similar to the metes and bounds that define real property. A patent is property; it is a deed for an idea. *See infra* Chapter 8.B.1.

Before the claims, the phrase "I claim" or "we claim" usually appears. The Vitale patent states:

> Having thus described my invention, I claim:
>
> 1. in combination a package having a flexible cover, a food article packaged therein and spaced downwardly from the cover, a unitary molded plastic package saving device for positioning between the cover and the article for supporting the package cover thereby preventing damage to the packaged food article by the cover, said device comprising the combination of *three or more spaced legs*, *each leg having one relatively flat end* adapted for engaging the packaged article and having its opposite end attached to a device cover portion."

Claims have "limitations" or "elements." For example, two of the limitations (italicized above) in claim 1 are "three or more spaced legs" and "each leg having one relatively flat end."

The patent is infringed only if all of the limitations are met. For example, if someone has a device that has a pedestal (one leg) or two legs, but everything else is the same as claimed in the patent, then there is no literal infringement because the claim requires "three or more spaced legs." As another example, if "each leg" does not have "one relatively flat end," then there would be no literal infringement.

Suppose there are three spaced legs, two of them have "relatively flat ends," but one of them has a rounded end. Does it infringe? Literally, no.

An equitable doctrine developed to take account of these situations. Where there is no literal infringement, there can be infringement under the "doctrine of equivalents" if the difference between the claims and the allegedly infringing device are "insubstantial." There is a huge body of law on this question, and applying it to a particular situation can be difficult. *See infra* Chapter 11.E.1.

Generally, juries are asked to decide literal infringement and infringement under the doctrine of equivalents.

Claim 1 is an "independent claim," which means it stands on its own. In contrast, claims 2, 3, and 4 of the Vitale patent are "dependent claims." Dependent claims always refer to another claim. In this case, the dependent claims all refer to claim 1. This means that all of the limitations of claim 1 are included in each dependent claim. The dependent claims add at least one additional limitation. Dependent

claims are always narrower than the independent claims on which they "depend."

Claims are read in light of a patent's "specification." The specification includes all of the text and figures that come before the claims. Sometimes the specification defines claim terms, but usually it just describes the invention and one or more "preferred embodiments." A preferred embodiment does not limit the scope of the claims. Instead, it is merely one example of how to "practice," or use, the invention. Every patent is required to disclose or describe the "best mode." The best mode is the inventor's subjective belief of the best way to practice the invention.

The "prosecution history" is the official written record before the patent office. This includes the patent application, the response of the patent office, which is usually called an "office action," and the ensuing back-and-forth between the applicant and the patent office. The prosecution history is also called the "file wrapper."

A patent's specification and its prosecution history are considered "intrinsic evidence" and are the primary sources for interpreting the scope of a patent's claims. There is a rough analogy to contracts, where the language of the contract is considered to be intrinsic evidence.

"Extrinsic evidence" for patents is everything else that might be used to interpret the patent. This includes dictionaries, inventor testimony, expert testimony, articles, and other patents. In the contract analogy, extrinsic evidence includes the negotiating history leading up to the signing of the contract and the conduct of the parties afterward.

In interpreting disputed claim terms in a patent, much more weight is given to intrinsic evidence in comparison to extrinsic evidence, though all forms of evidence may be considered. The evidence may be considered in any order the court deems appropriate.

C. Pleadings and Motions

As with many suits, patent cases often involve early motions to dismiss for failure to state a cause of action, for lack of jurisdiction, or for improper venue. Some special rules apply to patent cases, but the basic principles are the same or nearly the same as those in other cases.

In our hypothetical case, Vitale sues PizzaBoxCo in the District of Venus. The next day, PizzaBoxCo files a declaratory relief action in the District of Mars, asking for a declaration that the '586 patent is invalid

and not infringed. This battle over forums is common because some district courts are viewed as being patent friendly or unfriendly. The District of Mars transfers the case to Venus, applying its circuit's first-to-file rule.

D. Patent Reexamination

After a patent has been issued, it may be reexamined by the U.S. Patent Office. The Patent Office usually decides to conduct the reexamination in response to a petition from the patent owner, the defendant in patent litigation, or anyone else, although in a very small number of cases, the patent office decides on its own—without a petition from anyone—to reexamine a patent. The entire reexamination process usually takes at least one to two years, but there is large variation among reexamined patents. At the end of the process, claims may be canceled, allowed without any amendment, or allowed with specific amendments.

PizzaBoxCo files a petition for reexamination of the patent. The petition is granted. That means the patent office decided formally to reexamine the validity of the patent. PizzaBoxCo then moves to stay the litigation pending the outcome of the patent office's reexamination.

PizzaBoxCo's motion argues that the litigation should be stayed pending reexamination because the court should not expend its resources and those of the parties when claims of Vitale's patent may change. In other words, why should the court conduct litigation that involves a moving target? Vitale opposes the motion, arguing that the reexamination is a delaying tactic and statistics show a very high percentage of patents emerge from reexaminations without meaningful changes.

Courts have discretion to grant or deny the requested stay. Each case is fact-specific.

The Venus court denies PizzaBoxCo's motion. The court expresses a concern that granting the motion would prematurely end our hypothetical tale.

E. Discovery

Some districts have enacted specific rules for patent cases. *See infra* Chapter 7. The rules usually require the patent owner to identify with specificity the infringing products and the claims that are infringed,

and to state how each product infringes each claim. The rules also require "claim charts." A claim chart sets forth each limitation in a claim and charts the limitation against the components of the allegedly infringing product. The alleged infringer then must state in writing all bases on which the patent is alleged to be invalid, including the specific identification of invalidating prior art.

The parties continue to exchange in writing their positions on infringement and validity. They will also identify any claim terms they believe should be defined by the court and describe their differing views on how those claim terms should be interpreted.

Most districts have not enacted specific patent rules. Many individual judges have developed their own scheduling orders, often based on the local patent rules of other districts.

Here, Vitale and PizzaBoxCo jointly propose a specific schedule to exchange positions on

- infringement;
- validity; and
- claim terms to be construed by the court.

The court adopts the proposal at its initial scheduling conference. The parties then begin to exchange positions, and they later employ the normal discovery devices of serving interrogatories and taking corporate, fact, and expert depositions.

F. Claim Construction

"Claim construction" is unique for patent cases. The Supreme Court required judges to decide the meaning of disputed claim terms in its *Markman*[15] decision (*see infra* Chapter 8). Oral argument for claim construction is often called a *Markman* hearing. There is an analogy to statutes, albeit a somewhat imperfect one. When the meaning of a statute is disputed, judges are required to decide on the proper interpretation; it cannot be left to a jury. Usually there are many claim terms in dispute. Some judges have tried to limit the number of claim terms for interpretation. In *Vitale v. PizzaBoxCo*, there is a dispute over the meaning of only one claim limitation.

15. Markman v. Westview Instrs., Inc., 517 U.S. 370 (1996).

Vitale sued PizzaBoxCo because it sells pizza boxes with a plastic device that is used for holding up the top of the box cover. The parties stipulated to a description of the allegedly infringing device:

> From the top plan view, the legs are attached, in pairs, to the ends of two U-shaped or semi-circle pieces. Each piece is molded. The two U-shaped pieces are fused together. The "accused" device looks like:

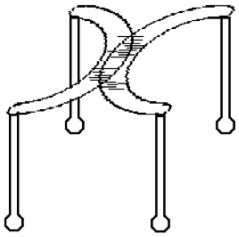

The court required the parties to state the disputed claim term and their competing claim constructions in a chart, which was filed with the court.

Vitale v. PizzaBoxCo Joint Claim Construction Chart		
Claim 1		
Disputed Claim Term	Plaintiff Vitale's Construction	Defendant PizzaBoxCo's Construction
"a *unitary molded* plastic package-saving device"	1. No construction is necessary. 2. If the court decides a construction is necessary, then a "unitary molded" device "is a device that consists of a part or parts that were formed from a mold, and it functions as a unit or single piece."	A "unitary molded" device is a device formed whole from a single mold only.

1. Plaintiff Vitale's claim construction arguments

Vitale argues that the first step in claim construction is to determine whether anything in the intrinsic record (the patent specification or the prosecution history) limits "unitary" or "molded." Vitale's principal argument is that words in the claim should be given their ordinary meaning unless the inventor clearly sets forth an explicit definition of a claim term different from its ordinary meaning or uses words representing a clear disavowal of claim scope. Vitale states that nothing in the intrinsic evidence favors a restrictive interpretation.

Since the word "unitary" is not a term of art in the "science" of pizza box construction, Vitale points to a common definition.

unitary
u·ni·tar·y (*yōō′nĭ-tĕr′ē*) *adj.* 1. of or relating to a unit. 2. Having the nature of a unit; whole. 3. Based on or characterized by one or more units.
Source: The American Heritage® Dictionary of the English Language: Fourth Edition

Dictionaries are not primary sources for defining claim terms, but Vitale argues that this supports the ordinary meaning of "unitary," which means one part. Vitale's claim construction argument is summarized by some of the PowerPoint slides, reproduced below, used during the claim construction hearing.

"Unitary" Means One Part

- where the part was always a single piece, "from scratch"

OR

- where the part was once more than one part, but is now permanently connected together (fused) into a single part that cannot be separated without breaking

Nothing in the intrinsic record limits "unitary" to top example.

Moore, Gan & Chew LLP

Molded

- Dictionary definition: Made from a mold — a hollow form or matrix for shaping a fluid or plastic substance.

mold[1] (mōld) *n.* **1.** A hollow form or matrix for shaping a fluid or plastic substance. **2.** A frame or model around or on which something is formed or shaped. **3.** Something that is made in or shaped on a mold.

Source: American Heritage College Dictionary

Moore, Gan & Chew LLP

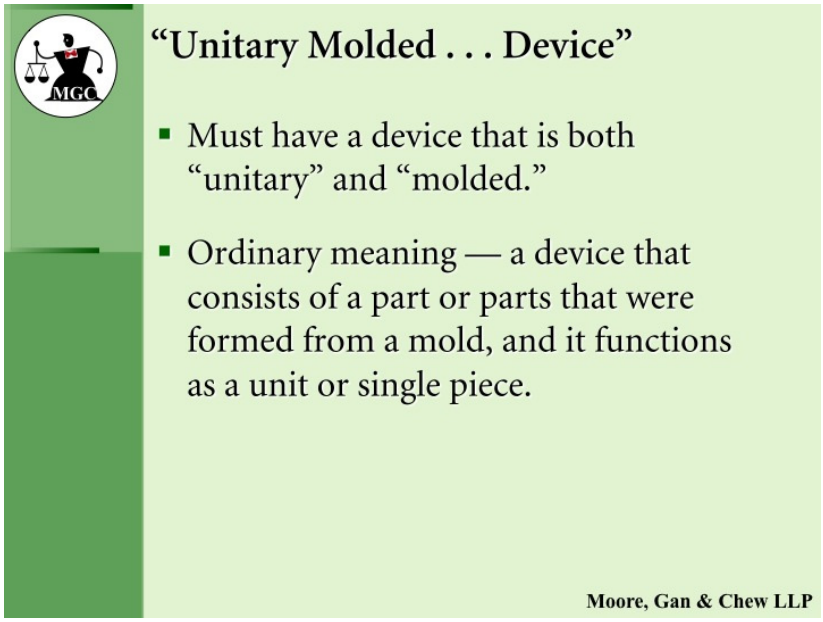
MGC
"Unitary Molded . . . Device"
Must have a device that is both "unitary" and "molded."
Ordinary meaning — a device that consists of a part or parts that were formed from a mold, and it functions as a unit or single piece.
Moore, Gan & Chew LLP

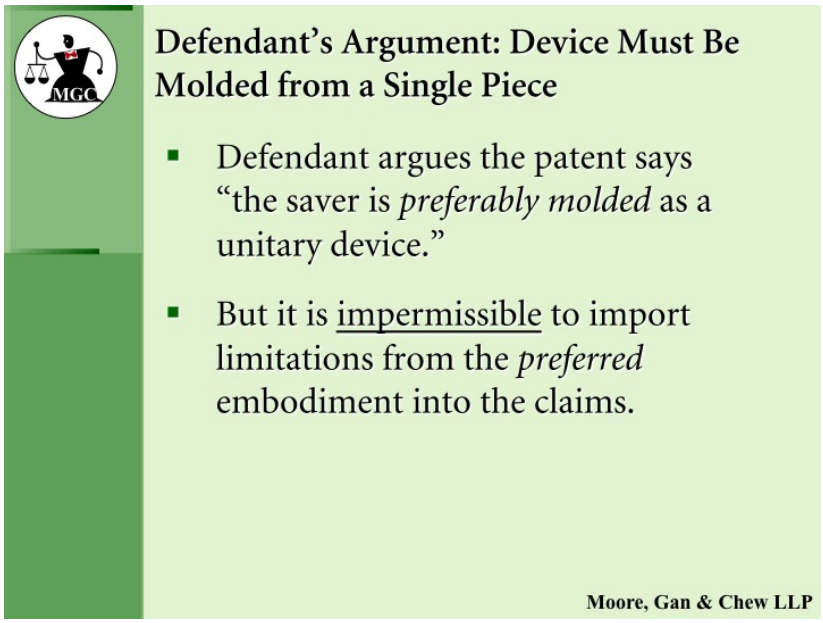
MGC
Defendant's Argument: Device Must Be Molded from a Single Piece
Defendant argues the patent says "the saver is preferably molded as a unitary device."
But it is impermissible to import limitations from the preferred embodiment into the claims.
Moore, Gan & Chew LLP

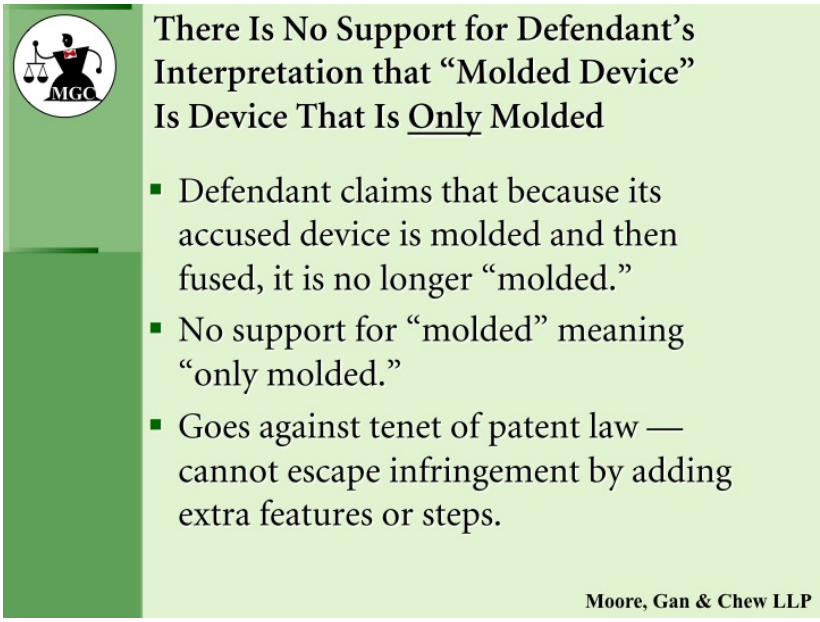
MGC
There Is No Support for Defendant's Interpretation that "Molded Device" Is Device That Is Only Molded
Defendant claims that because its accused device is molded and then fused, it is no longer "molded."
No support for "molded" meaning "only molded."
Goes against tenet of patent law — cannot escape infringement by adding extra features or steps.
Moore, Gan & Chew LLP

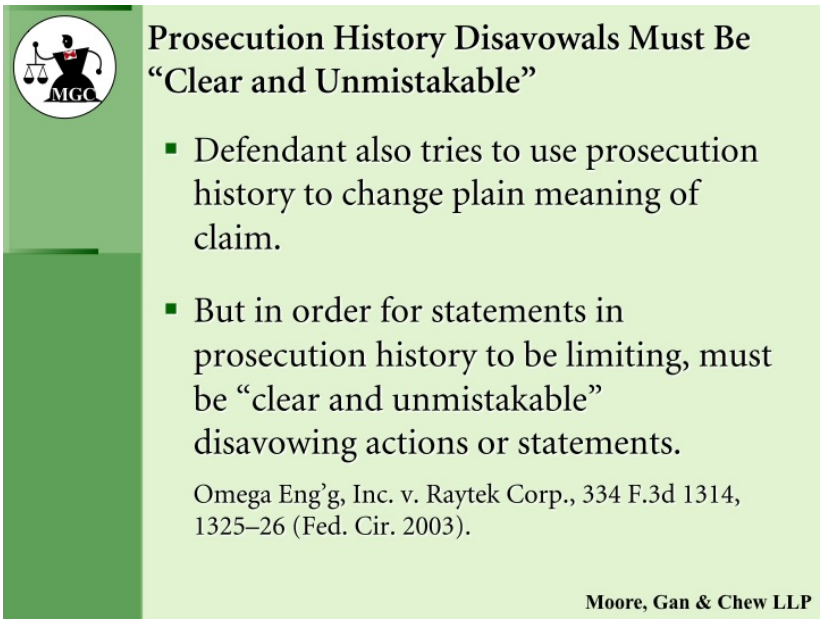
MGC
Prosecution History Disavowals Must Be "Clear and Unmistakable"
Defendant also tries to use prosecution history to change plain meaning of claim.
But in order for statements in prosecution history to be limiting, must be "clear and unmistakable" disavowing actions or statements.
Omega Eng'g, Inc. v. Raytek Corp., 334 F.3d 1314, 1325–26 (Fed. Cir. 2003).
Moore, Gan & Chew LLP

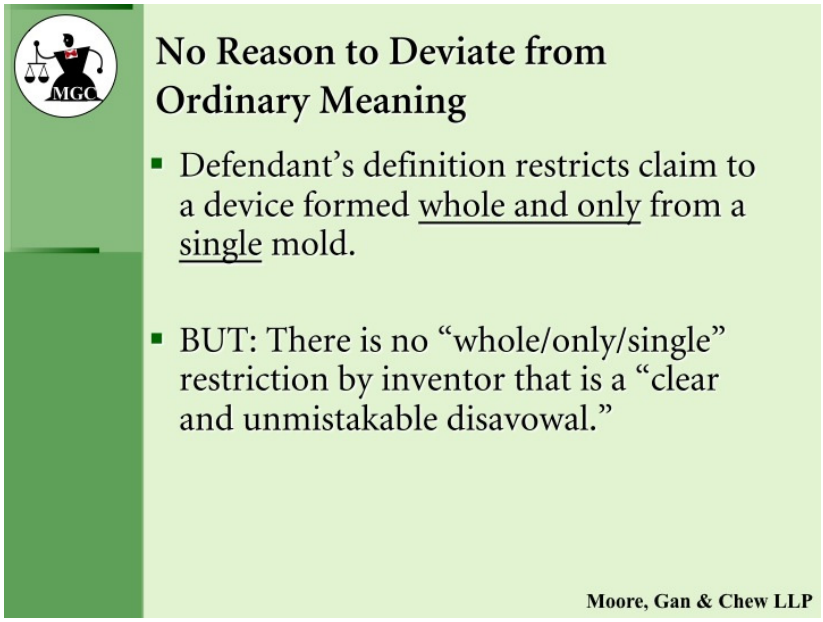
MGC
No Reason to Deviate from Ordinary Meaning
Defendant's definition restricts claim to a device formed whole and only from a single mold.
BUT: There is no "whole/only/single" restriction by inventor that is a "clear and unmistakable disavowal."
Moore, Gan & Chew LLP

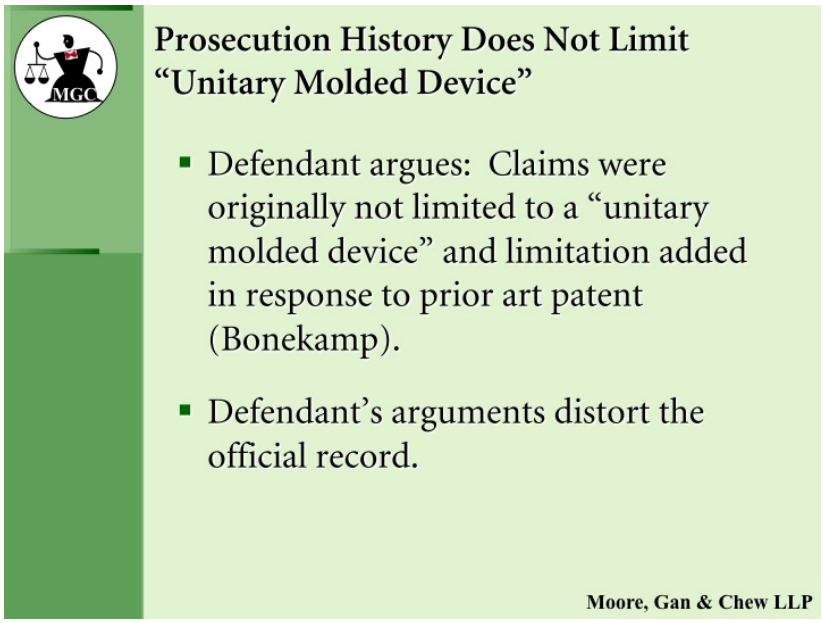
MGC
Prosecution History Does Not Limit "Unitary Molded Device"
Defendant argues: Claims were originally not limited to a "unitary molded device" and limitation added in response to prior art patent (Bonekamp).
Defendant's arguments distort the official record.
Moore, Gan & Chew LLP

Vitale '586 Patent vs. Bonekamp — "Differs in Concept"

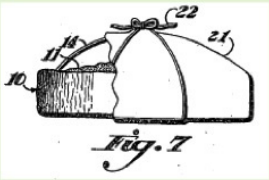

Vitale

- One flat cover piece — no circular dome
- Legs extending

Bonekamp

- Circular dome that used separate pieces
- No legs extending

Moore, Gan & Chew LLP

Prosecution History — Discussion of Bonekamp

- Original claim 3: "Unitary molded device." Claim rejected at first because of Bonekamp.
- Inventor argued that Bonekamp "*differs significantly from that of applicant in concept and in product engagement* and most likely in difficulty of manufacture and access . . . structure is remote."
- This is hardly a clear and unmistakable surrender of a unitary molded device that is a single piece from two molded parts fused together.

Moore, Gan & Chew LLP

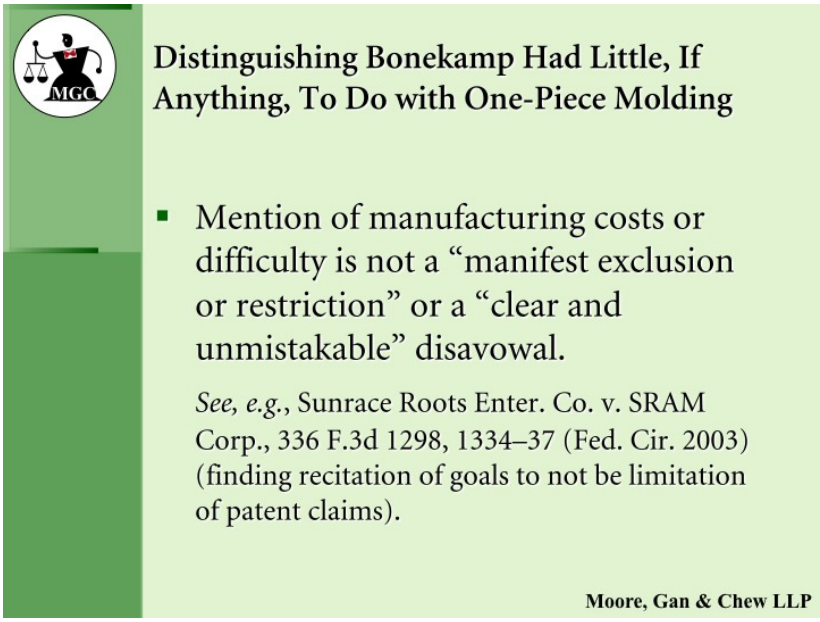
MGC
Distinguishing Bonekamp Had Little, If Anything, To Do with One-Piece Molding
Mention of manufacturing costs or difficulty is not a "manifest exclusion or restriction" or a "clear and unmistakable" disavowal.
See, e.g., Sunrace Roots Enter. Co. v. SRAM Corp., 336 F.3d 1298, 1334–37 (Fed. Cir. 2003) (finding recitation of goals to not be limitation of patent claims).
Moore, Gan & Chew LLP

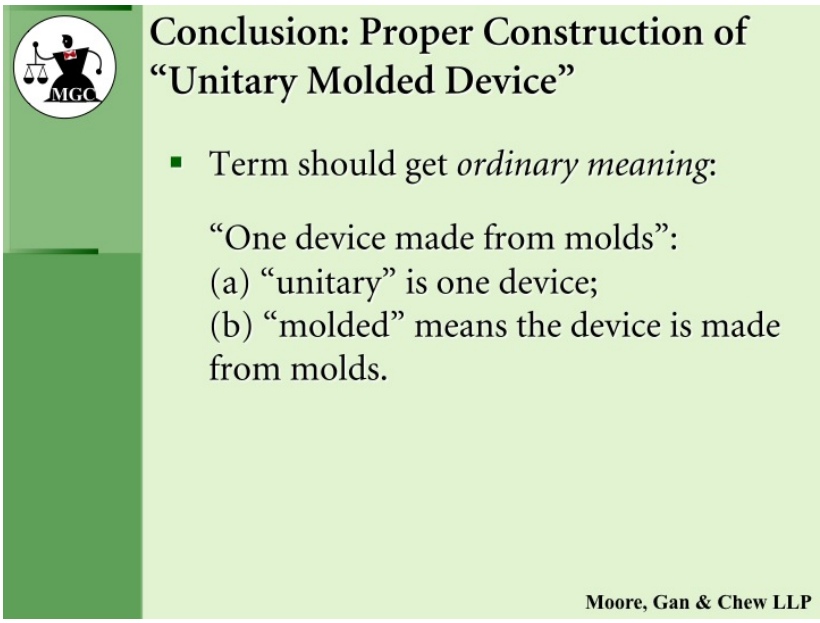
MGC
Conclusion: Proper Construction of "Unitary Molded Device"
Term should get ordinary meaning:
"One device made from molds":
(a) "unitary" is one device;
(b) "molded" means the device is made from molds.
Moore, Gan & Chew LLP

2. *Defendant PizzaBoxCo's argument*

PizzaBoxCo argues it relies on intrinsic evidence that should be given controlling weight, in contrast to extrinsic dictionary definitions. Nevertheless, dictionary definitions support its position. PizzaBoxCo states that the ordinary meaning of "unitary" should be applied to the phrase "unitary molded . . . device" to require the device to be formed whole from one mold.

PizzaBoxCo contends that something is not "molded" if it is "molded and then fused together with something else"—a molded article does not require further assembly steps.

PizzaBoxCo also used a PowerPoint presentation at the claim construction hearing.

Specification Supports Defendant's Construction

- Specification shows "unitary molded . . . device" means a device formed as a single unit.
- "In order to provide a lightweight and inexpensive device for the purposes discussed above, the saver is preferably *molded as a unitary device. . . .*"

  '586 Patent 2:10–13.

Old, Coll, Edge & Try LLP

Specification Only Discloses a Device Made from a Single Mold

- No suggestion that two or more molds can be used.
- "Unitary molded" does not refer to two molds.
- No suggesting of "fusing" different molded parts.

Old, Coll, Edge & Try LLP

Prosecution History Supports Defendant's Construction

- Original claims 1 and 2 did not have a "unitary" or "molded" limitation. They broadly claimed "a package saving device."
- Original claims 1 and 2 were rejected for obviousness.
- The applicant canceled original claims 1 and 2.
- The only independent claim remaining contains the limitation in original claim 3 ("unitary molded plastic . . . device"), which describes the preferred embodiment.

Old, Coll, Edge & Try LLP

Bonekamp Prior Art Distinguished

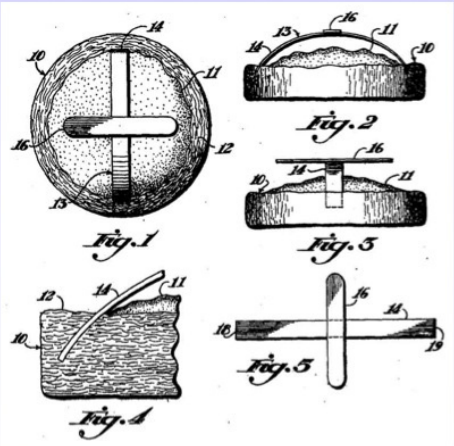

Old, Coll, Edge & Try LLP

"Unitary Molded Plastic" Distinguishes Bonekamp Prior Art

- "[The Bonekamp device] *differs significantly* from that of applicant in concept and in product engagement and most likely *in difficulty of manufacture and access*."

  Applicant's Remarks, Feb. 16, 1984, p. 3.

Old, Coll, Edge & Try LLP

Bonekamp Distinguished: Attaching Two Pieces Together Is Not "Unitary"

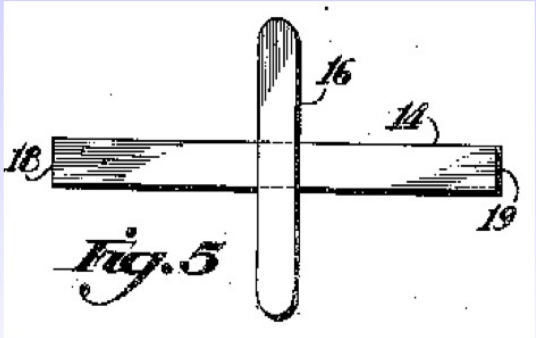

- Device was "two strips of cardboard . . . or the like which are attached together at their central points."
  Bonekamp '629 Patent 2:10–12.

Old, Coll, Edge & Try LLP

A Device Like This Is Not "Molded" or "Unitary"

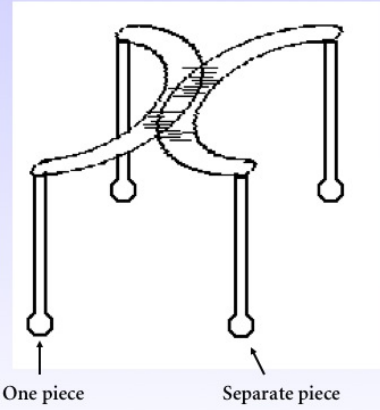

No single molding process makes the device.

Old, Coll, Edge & Try LLP

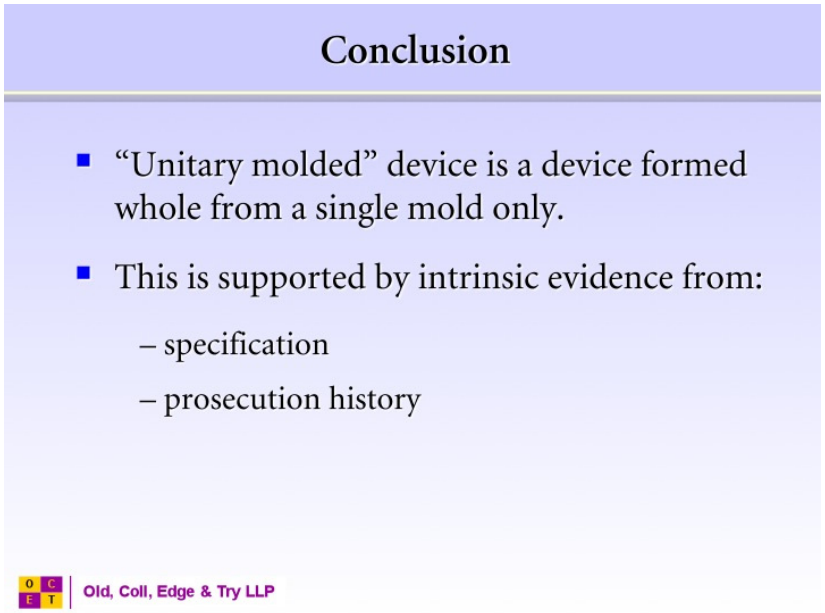

The court adopts Vitale's proposed construction and rules that a "unitary molded . . . device" must be "one device made from molds."

G. Summary Judgment Motions

Vitale moves for summary judgment that PizzaBoxCo infringes because it sells pizza boxes with a unit that is a plastic molded device. PizzaBoxCo cross-moves for summary judgment of noninfringement because the device it sells is made from two components that are fused together. PizzaBoxCo also moves for further claim construction to clarify that the entire device must be made from one mold.

The court declines to do further claim construction and denies the cross-motions for summary judgment. For a detailed review of summary judgment motions, see *infra* Chapter 9.

H. Trial

The case goes to trial. PizzaBoxCo's main defenses are noninfringement and inequitable conduct. The inequitable conduct defense is

based on the allegation that Vitale's attorneys intentionally withheld material prior art from the Patent Office when the office was considering the original patent application.

Vitale moves to sever the inequitable conduct defense for a bench trial to be held at the conclusion of the jury trial in the event that liability is found. The motion is granted.

The jury finds in favor of Vitale and awards damages equal to 5% of PizzaBoxCo's revenues on sales of the plastic device. No additional royalties are awarded for the sales of pizza boxes, even though they were always sold by PizzaBoxCo with the plastic device.

At the bench trial, the court concludes there was no inequitable conduct.

Vitale moves for a permanent injunction and, in the alternative, for a 5% compulsory license fee to be paid pending appeal. Before the motion is decided—after an extensive mediation before retired Judge Armtwister—the case settles.

Both sides declare victory.

I. Reproduction of Vitale Patent

United States Patent [19]
Vitale

[11] **Patent Number: 4,498,586**
[45] **Date of Patent: Feb. 12, 1985**

[54] **PACKAGE SAVER**

[76] Inventor: **Carmela Vitale,** 1076 Carll Straight Path, Dix Hills, N.Y. 11746

[21] Appl. No.: **465,642**

[22] Filed: **Feb. 10, 1983**

[51] **Int. Cl.**[3] **B65D 85/72**
[52] **U.S. Cl.** **206/525;** 426/124; 426/128; 206/45.32; 206/541
[58] **Field of Search** 206/525, 527, 45.32, 206/541, 551; 229/36, 33; 426/128, 124; 215/231; 248/346

[56] **References Cited**

U.S. PATENT DOCUMENTS

1,357,155 10/1920 Dinkins 215/231
2,452,629 11/1948 Bonekamp 426/128
2,928,537 3/1960 Stagner 426/124
3,180,739 4/1965 Stoker 426/124

Primary Examiner—William T. Dixson, Jr.
Attorney, Agent, or Firm—Stoll, Wilkie, Previto & Hoffman

[57] **ABSTRACT**

A temperature resistant molded plastic device is described for use in boxes or packages such as pizza boxes where there is a tendency of large cover portions to sag downwardly to damage the soft pizza or other packaged products. In use, the saver is positioned near the center of the package to support the box cover for protecting the contents.

4 Claims, 4 Drawing Figures

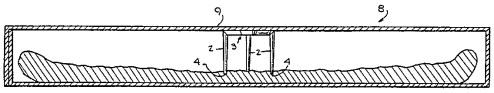

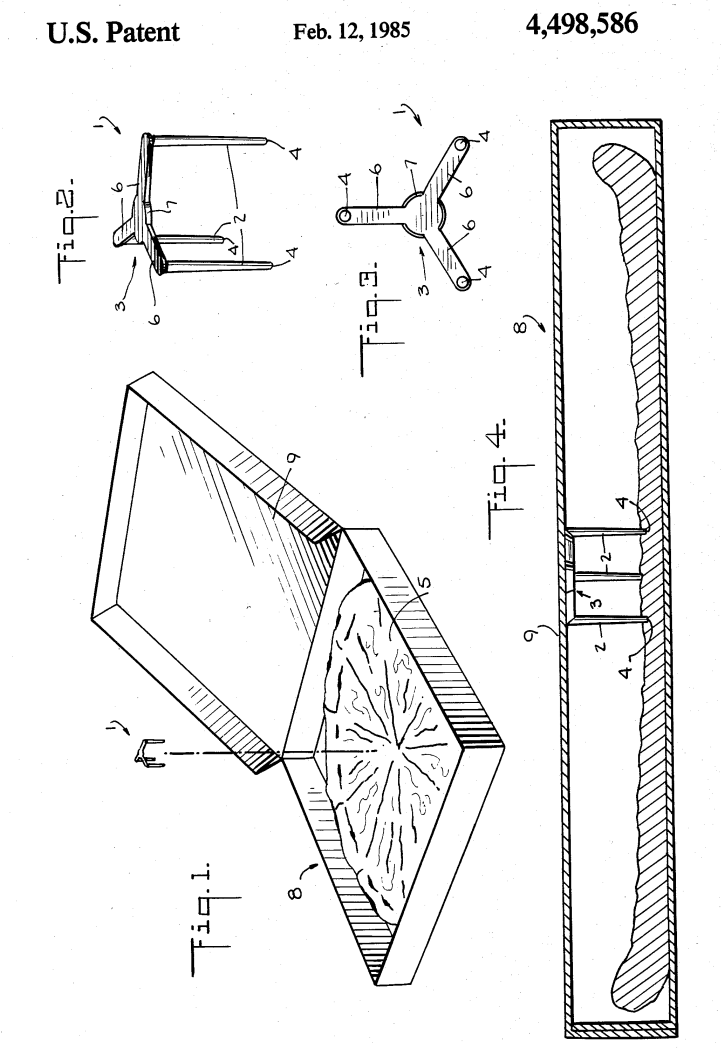
U.S. Patent
Feb. 12, 1985
4,498,586
Fig. 1.
Fig. 2.
Fig. 3.
Fig. 4.

4,498,586

PACKAGE SAVER

BACKGROUND OF THE INVENTION

The present invention relates to a package saver or device for improving the packaging of soft products which may be damaged in boxes or cartons with relatively large sagging covers.

More particularly, the invention relates to such a package saver which is molded from plastic to have minimal size, weight, and cost and which is suitable for supporting large carton covers such as those used for pizza pies. The molded plastic saver is positioned centrally of the completed pie or other product to support the cover during storage and delivery.

The package saver is useful in connection with the delivery of products which require a package, but whose cost necessarily requires a relatively inexpensive and disposable box or carton. Cartons of this type, and particularly those used to deliver pizza pies or large cakes or pies, comprise boxes with relatively large covers formed of inexpensive board material.

Due to the quality of the board and their large size, there is a tendency of the covers to sag or to be easily depressed at their center portions so that they may damage or mark the pies or cakes during storage or delivery.

Accordingly, an object of the present invention is to provide an easily manufactured, relatively inexpensive, lightweight article which is placed on the pie or cake within the package to support the central portion of the package cover during delivery.

Another object of the present invention is to provide an improved means for protecting articles such as pizza and other pies or cakes from damage during delivery in boxes.

Another object of the present invention is to provide an inexpensive device for protecting pizza and other pies or cakes during delivery.

Other and further objects of the present invention will become apparent upon an understanding of the illustrative embodiments about to be described, or will be indicated in the appended claims, and various advantages not referred to herein will occur to one skilled in the art upon employment of the invention in practice.

BRIEF DESCRIPTION OF THE DRAWINGS

A preferred embodiment of the invention has been chosen for purposes of illustration and description and is shown in the accompanying drawings, forming a part of the specification, wherein:

FIG. **1** is a perspective view illustrating the package saver being used with a typical pizza pie delivery box.

FIG. **2** is a perspective view of a package saver in accordance with the invention.

FIG. **3** is a top plan view of the package saver of FIG. **2**.

FIG. **4** is a vertical sectional view of a typical pizza box with the package or pizza saver in position.

DESCRIPTION OF THE PREFERRED EMBODIMENT

In order to provide a lightweight and inexpensive device for the purpose discussed above, the saver is preferably molded as a unitary device from one of the plastics which is heat resistant such as the thermo set plastics and which will resist temperatures of as high as about 500° F.

In its preferred form, as illustrated, the saver **1** has spaced vertical legs **2** connected to a cover support **3**. The lower portions of the legs **4** have a minimal cross section to minimize any marking of to the protected article **5** and they are also made thin for minimizing the volume of plastic required. The cover support **3** of the saver **1** also preferably has a minimum volume by consisting of a spoke-like arrangement of radially oriented leg supports **6** molded to extend from a central portion **7**.

This construction of portion support **3** provides a suitable broad and stable support for box **8** cover **9** which is of minimal volume and thus has minimal cost. A disposable saver **1** is provided which may be used in the boxes or cartons without damage to the packaged pizza pie or other product.

As various changes may be made in the form, construction and arrangement of the invention and without departing from the spirit and scope of the invention, and without sacrificing any of its advantages, it is to be understood that all matters herein is to be interpreted as illustrative and not in a limiting sense.

Having thus described my invention, I claim:

1. in combination a package having a flexible cover, a food article packaged therein and spaced downwardly from the cover, a unitary molded plastic package saving device for positioning between the cover and the article for supporting the package cover thereby preventing damage to the packaged food article by the cover, said device comprising the combination of three or more spaced legs, each leg having one relatively flat end adapted for engaging the packaged article and having its opposite end attached to a device cover portion.

2. The combination as claimed in claim **1** in which said device cover portion comprises a number of flat cover sections radiating from a common flat central portion.

3. The combination as claimed in claim **1** wherein said device is formed of heat resistant plastic.

4. The combination as claimed in claim **1** wherein said device is formed of thermo-setting plastic.

* * * * *

Blank pages inserted to preserve pagination when printing double-sided copies.

Chapter 2: The Complaint[16]

A. Pleading Infringement

A defendant may infringe directly or indirectly by inducing or contributing to the direct infringement of another person. As in other cases, well-pleaded patent complaints place the alleged infringer on notice as to the infringing acts and relief requested.[17] Unlike in most other areas of the law, individuals are not protected from the assertion of patent claims against them personally merely because they are acting as officers of a corporation.[18]

1. Direct infringement

The Federal Circuit has held that the following five elements are sufficient to state a claim of infringement: (1) ownership of the patent, (2) the infringer's name, (3) a citation to the infringed patent, (4) the infringing activity, and (5) citations to federal patent law.[19]

2. Induced infringement

Pursuant to 35 U.S.C. § 271(b), "[w]hoever actively induces infringement of a patent shall be liable as an infringer." Active inducement requires a showing that a defendant intentionally encouraged patent infringement by another. The "alleged infringer must be shown . . . to have *knowingly* induced infringement," not merely knowingly induced the *acts* that constitute direct infringement.[20] Such intentional encouragement requires the defendant to have engaged in some affirmative act and not simply failed to take steps to prevent infringement.[21] In ad-

---

16. Michael Graif, Curtis, Mallet-Prevost, Colt & Mosle LLP, New York, New York. The assistance of Tamany Vinson Bentz, of Venable LLP, in the preparation of this chapter is gratefully acknowledged.

17. *See* Fed. R. Civ. P. 8.

18. *See, e.g.*, Sensonics, Inc. v. Aerosonic Corp., 81 F.3d 1566 (Fed. Cir. 1996).

19. Phonometrics, Inc. v. Hospitality Franchise Sys., Inc., 203 F.3d 790, 794 (Fed. Cir. 2000); Home & Nature Inc. v. Sherman Specialty Co., 322 F. Supp. 2d 260, 265 (E.D.N.Y. 2004).

20. DSU Med. Corp. v. JMS Co., Ltd., 471 F.3d 1293, 1306 (Fed. Cir. 2006).

21. Tegal Corp. v. Tokyo Electron Co., Ltd., 248 F.3d 1376, 1378 (Fed. Cir. 2001).

dition, a claim under § 271(b) requires a showing that the activity induced by the defendant constitutes direct infringement.

Courts have taken different approaches toward allegations of induced infringement. Most have required that a claimant allege intent and direct infringement of the asserted patents. In some cases a claimant may allege intent by asserting that there was "specific intent and/or . . . the desire to actively induce infringement."[22]

3. *Contributory infringement*

Pursuant to 35 U.S.C. § 271(c), whoever sells a component of a patented machine for use in practicing a patented process that does not have a substantial noninfringing use shall be liable as a contributory infringer.

A plaintiff may allege generically that a defendant "infringed, induced and/or contributed to the infringement." Unlike induced infringement, however, contributory infringement does not require an allegation of intent. The statute requires only knowledge that an activity caused infringement.[23]

The language of § 271(c) imposes liability for contributory infringement based on an offer to sell a component of a patented invention even if an actual sale has not taken place.[24] In such cases it is sufficient for a claimant to plead that the defendant made an offer to sell to a third party who would have directly infringed had the sale taken place.

4. *Infringement of drug patents*

Subpart (1) of 35 U.S.C. § 271(e) establishes a safe harbor for acts "solely for uses reasonably related to the development and submission of information under a Federal law which regulates the manufacture,

---

22. Takeda Chem. Indus., Ltd. v. Watson Pharm., Inc., 329 F. Supp. 2d 394, 401 (S.D.N.Y. 2004); *see also* Snap-on Inc. v. Hunter Eng'g Co., 29 F. Supp. 2d 965, 970 (E.D. Wis. 1998) (finding the allegation that a defendant's conduct was "willful and deliberate" was sufficient to allege intent).

23. *See* Hewlett-Packard Co. v. Bausch & Lomb Inc., 909 F.2d 1464 (Fed. Cir. 1990) ("proof of a defendant's *knowledge*, not *intent*, that his activity cause infringement was necessary to establish contributory infringement" (emphasis in original)).

24. *See* Finnsugar Bioproducts, Inc. v. Raytheon Engineers & Constructors, Inc., 1998 WL 703463 (N.D. Ill. 1998).

use, or sale of drugs or veterinary biological products." This provision protects a company that is using a patented invention to generate data for an FDA filing, such as an Abbreviated New Drug Application (ANDA). It is, however, an act of infringement under subpart (2) to:

> Submit [either] an [ANDA or an application under § 512 of the Federal Food, Drug, Cosmetic Act] if the purpose of such submission is to obtain approval under such Act to engage in the commercial manufacture, use, or sale of a drug or veterinary biologic product claimed in a patent or the use of which is claimed in a patent before the expiration of such patent.

Infringement under this section depends on whether the defendant "will likely market an infringing product" once the FDA approves the ANDA.[25] As such, allegations of infringement based on the filing of an ANDA require the plaintiff to assert that, if the application is approved, the accused infringer will infringe the asserted patent.

A complainant may also allege that the accused infringer's ANDA has induced a third party to directly infringe the asserted patent. In such cases, it must be found that the accused infringer knows or should know that its actions will induce infringement.[26] Courts have not ruled that such knowledge must be pled.

5. *Infringement for supplying components for assembly into a patented product outside of the United States*

Federal law also prohibits inducing or contributing to patent infringement outside the United States. It is an act of infringement under 35 U.S.C. § 271(f) to:

> (1) [export] all or a substantial portion of the components of a patented invention . . . in such manner as to actively induce the combination of such components outside of the [U.S.] in a manner that would infringe the patent if such combination occurred within the [U.S.]; or
>
> (2) [export] any component of a patented invention that is especially made or especially adapted for the use in the invention and not a staple article or commodity of commerce suitable for sub-

25. Glaxo Inc. v. Novopharm, Ltd., 110 F.3d 1562, 1568 (Fed. Cir. 1997).

26. *See* Allergan, Inc. v. Alcon Labs., Inc., 324 F.3d 1322, 1332 (Fed. Cir. 2003) (citing Warner-Lambert v. Apotex, 316 F.3d 1348, 1354–55 (Fed. Cir. 2003)).

> stantial noninfringing use, . . . knowing that such component is so made or adapted and intending that such component will be combined outside of the [U.S.] in a manner that would infringe . . . the patent if such combination occurred within the U.S.

Claimant may allege under subpart (1): (1) exportation of "all or a substantial portion" of the components of infringing product; and (2) intent to induce the combination of such components outside the United States in a manner that would infringe inside the United States.

Claimant may allege under subpart (2): (1) the exportation of a component that is especially adapted for an infringing use; (2) that the defendant knows that the component is so adapted; and (3) that the defendant intends that the component be combined abroad in a patented invention.[27]

6. *Infringement by a product made outside the United States of a U.S. patent covering a process*

According to 35 U.S.C. § 271(g), it is considered an act of infringement to import into the United States or offer for sale, sell, or use within the United States a product made by a process patented in the United States. By the terms of the statute, a claimant alleging infringement under § 271(g) should plead: (1) an act of importation into the United States, an offer to sell, sale, or use of the product; and (2) that the accused act occurred during the term of the process patent.

7. *Willfulness*

Willful infringement is the "deliberate disregard" of another's patent rights.[28] A finding of willful infringement allows the court to multiply a patentee's damages up to threefold pursuant to 35 U.S.C. § 284 and award attorneys' fees under 35 U.S.C. § 285.[29] Because willfulness is not fraud, a plaintiff need not plead willful infringement with particularity.[30] Accordingly, willful infringement is usually pled by generally al-

---

27. *See* Microsoft v. AT&T, 127 S. Ct. 1746 (2007).

28. Vulcan Eng'g Co. v. FATA Aluminum, Inc., 278 F.3d 1366, 1378 (Fed. Cir. 2002); *see also In re* Seagate Tech. LLC, 497 F.3d 1360 (Fed. Cir. 2007).

29. *See also* Read v. Portec, Inc., 970 F.2d 816, 826–31 (Fed. Cir. 1992).

30. *See* Ferguson Beuregard/Logic Controls v. Mega Sys., LLC, 350 F.3d 1327, 1342–43 (Fed. Cir. 2003) ("the pleading requirement for willful infringement does not rise to the stringent standard required by Rule 9(b)").

leging that the infringement was and continues to be either "willful" or "willful and deliberate," together with a request for enhanced damages in the prayer for relief.

For information about separating willfulness issues from liability issues, see *infra* Chapter 10.A.2. For information about expert testimony on willfulness, see *infra* Chapter 10.C.2.b.

B. Pleading Damages and Other Remedies

A plaintiff will typically request the following types of relief for patent infringement: (1) compensatory damages such as lost profits or reasonable royalty, (2) enhanced damages, (3) injunctive relief, and (4) attorneys' fees. *See infra* Chapter 12.C.

1. Compensatory damages

Claimants may generically plead entitlement to all compensatory damages. For instance, "damages adequate to compensate," "damages according to proof," "general, special, actual and/or statutory damages," or "actual damages, including lost profits," are sufficient to preserve the plaintiff's right to all forms of compensatory damage.

2. Enhanced damages

A claimant seeking enhanced damages for willful infringement must request that damages be enhanced, since such relief exceeds the compensatory relief to which a plaintiff is typically entitled. For instance, a claimant will often request that the "Court award treble damages against defendant for its willful infringement." *See also infra* Chapter 12.C.

3. Injunctions

Federal law also allows courts to grant injunctions if necessary to prevent a violation of patent rights.[31] Claimants may request that a defendant be "preliminarily and permanently enjoined and restrained from making, importing, using, offering for sale, selling, or causing to be sold any product falling within, or designed to conduct a method fal-

31. 35 U.S.C. § 283 (2000); *see also* eBay Inc. v. MercExchange LLC, 126 S. Ct. 1837 (2006).

ling within, the scope of any claim of the patents-in-suit, or otherwise infringing or contributing to or inducing infringement of any claim of the patents-in-suit." However, claimants also make general requests for an order "preliminarily and permanently enjoining [the defendant] from infringing the patents-in-suit." *See also infra* Chapter 12.D.

4. *Attorneys' fees*

Finally, most claimants request attorneys' fees pursuant to 35 U.S.C. § 285, which allows for reasonable attorneys' fees to be awarded to the prevailing party "in exceptional cases." Attorneys' fees are awarded only in limited circumstances—they are an "exception to the American rule."[32] As such, a request for attorneys' fees under § 285 must be pled before a successful party can be awarded such fees. Claimants may request, in accordance with the statute, that "the Court declare this to be an exceptional case and award claimant its attorneys' fees." *See also infra* Chapter 12.C.4.

32. Forest Labs., Inc. v. Abbot Labs., 339 F.3d 1324, 1329 (Fed. Cir. 2003).

Chapter 3: Motions to Dismiss, to Transfer, to Strike[33]

A. Motion to Dismiss

1. Lack of subject-matter jurisdiction—Fed. R. Civ. P. 12(b)(1)

A district court has subject-matter jurisdiction over a patent lawsuit under 28 U.S.C. § 1338(a) only if the complaint establishes either that (1) the patent laws create the cause of action (e.g., a patent infringement claim, or a declaratory judgment action to declare a patent invalid or not infringed) or (2) the plaintiff's right to relief necessarily depends on the resolution of a substantial question of patent law. "[I]ssues of inventorship, infringement, validity and enforceability present sufficiently substantial questions of patent law to support jurisdiction under section 1338(a)."[34] However, issues relating to ownership of patents do not.[35]

The mere presence of a claim that implicates patent issues does not necessarily create a cause of action arising under the patent laws.[36] If a claim is supported by alternative theories, there is no § 1338(a) jurisdiction "unless patent law is essential to each of those theories." Thus, a district court has subject-matter jurisdiction over a patent lawsuit under 28 U.S.C. § 1338(a) only if the complaint establishes either that (1) the patent laws create the cause of action, or (2) the plaintiff's right to relief necessarily depends on the resolution of a substantial question of patent law.[37]

---

33. Robert J. Gunther, Jr., Wilmer Cutler Pickering Hale and Dorr, LLP, and Daiske Yoshida, Latham & Watkins, LLP.

34. Bd. of Regents v. Nippon Tel. & Tel. Corp., 414 F.3d 1358, 1363 (Fed. Cir. 2004); *see, e.g.*, U.S. Valves, Inc. v. Dray, 212 F.3d 1368, 1372 (Fed. Cir. 2000) (breach of contract claim in which it was necessary for plaintiff to show that its patents were infringed to prove the alleged breach raised substantial question of patent law); Univ. of Colo. Found. v. Am. Cyanamid Co., 196 F.3d 1366, 1372 (Fed. Cir. 1999) (plaintiff's claim of equitable title to a U.S. patent required determination of inventorship).

35. Consolidated World Housewares Inc. v. Finkle, 831 F.2d 261 (Fed. Cir. 1987).

36. *Id.* at 265.

37. Uroplasty, Inc. v. Advanced Uroscience, Inc., 239 F.3d 1277, 1280 (Fed. Cir. 2001) (claim that defendant improperly disclosed trade secret information in a patent application did not present a substantial question of patent law). Also, the presence of a patent law defense or counter-

The Declaratory Judgment Act, 28 U.S.C. § 2201, is regularly used in patent cases. For example, in the context of a patent license negotiation, the declaratory plaintiff often seeks a judgment declaring the patent-at-issue either invalid or not infringed by its current or planned activities. In a patent-based declaratory judgment action, the law of the Federal Circuit governs whether an actual controversy exists, and the inquiry is generally quite fact-intensive.[38] District courts must look at "all the circumstances."[39]

The Federal Circuit has held that "where a patentee asserts rights under a patent based on certain identified ongoing or planned activity of another party, and where that party contends that it has the right to engage in the accused activity without license, an Article III case or controversy will arise and the party need not risk a suit for infringement by engaging in the identified activity before seeking a declaration of its legal rights."[40] Mere knowledge of the existence of a patent is insufficient, absent "some affirmative act by the patentee."[41]

Because the Declaratory Judgment Act provides that a federal court "may" declare the rights of adverse parties, the authority to do so is discretionary. Thus, even when a case or controversy exists, a court has broad discretion to refuse to hear the suit in question.[42] The Federal Circuit applies an abuse-of-discretion standard to a trial court's refusal to hear a declaratory judgment case. An abuse of discretion "may occur if the trial court's decision was based upon an incorrect conclusion of law or clearly erroneous findings of fact, was devoid of any evidence in the record upon which the court rationally could have based its decision, or was clearly unreasonable or arbitrary."[43] In contrast, courts may not exercise discretion to hear a case when no ripe controversy yet

---

claim in answer to a complaint does not make the action arise under the patent laws for purposes of § 1338(a). Christianson v. Colt Indus. Operating Corp., 486 U.S. 800, 809 (1988).

38. MedImmune, Inc. v. Centocor, Inc., 409 F.3d 1376, 1378 (Fed. Cir. 2005).

39. Teva Pharms. USA, Inc. v. Novartis Pharms. Corp., 482 F.3d 1330, 1339 (Fed. Cir. 2007) (quoting MedImmune, Inc. v. Genentech, Inc., 127 S. Ct. 764, 774 n.11 (2007)).

40. SanDisk Corp. v. STMicroelectronics, Inc., 480 F.3d 1372, 1381 (Fed. Cir. 2007).

41. *Id.* at 1380–81.

42. EMC Corp. v. Norand Corp., 89 F.3d 807, 814 (Fed. Cir. 1996).

43. Genentech, Inc. v. Eli Lilly & Co., 998 F.2d 931, 936 (Fed. Cir. 1993).

exists and the appellate court reviews a denial of a motion to dismiss for lack of case or controversy without deference.[44]

Like other jurisdictional prerequisites, reasonable apprehension must exist at the time the suit is filed.[45] Though post-filing events "may not create jurisdiction where none existed at the time of filing . . . [t]he exercise of judicial power under Article III depends at all times on the existence of a case or controversy," and a district court may "properly consider[] post-filing events in its evaluation of continuing jurisdiction."[46] The declaratory plaintiff has the burden of establishing that jurisdiction existed at the time the complaint was filed and that the controversy has continued since.[47]

2. *Failure to join a necessary party—Fed. R. Civ. P. 12(b)(7), 19*

A party may move to dismiss a claim for failure to join a necessary party under Rules 12(b)(7) and 19. Rule 19 requires a court to undertake a two-step analysis to determine whether a person in question should be joined.[48] First, the court must determine whether a party is "necessary" under Rule 19(a); then, if the court determines that a party is necessary and cannot be joined, "the court shall determine whether in equity and good conscience the action should proceed among the parties before it, or should be dismissed" under the factors described in Rule 19(b).[49]

If a plaintiff has all substantial rights under the asserted patent, then the patentee is not a necessary party and need not be joined.[50] If a plaintiff, by contrast, does not have standing to sue under the patent, then it follows that the case should be dismissed for nonjoinder under Rule 19.[51]

---

44. *See* Teva Pharms. USA, Inc. v. Pfizer, Inc., 395 F.3d 1324, 1332 (Fed. Cir. 2005); Gen-Probe Inc. v. Vysis, Inc., 359 F.3d 1376, 1379 (Fed. Cir. 2004).

45. Indium Corp. of Am. v. Semi-Alloys, Inc., 781 F.2d 879, 883 (Fed. Cir. 1985).

46. Spectronics Corp. v. H.B. Fuller Co., 940 F.2d 631, 636 (Fed. Cir. 1991).

47. *Id.* at 635.

48. Vaupel Textilmaschinen KG v. Meccanica Euro Italia SPA, 944 F.2d 870, 876 (Fed. Cir. 1991).

49. *Id.* n.1; Fed. R. Civ. P. 19.

50. *Vaupel*, 944 F.2d at 876.

51. Enzo APA & Son, Inc. v. Geapag A.G., 134 F.3d 1090, 1094 (Fed. Cir. 1998).

3. *Lack of personal jurisdiction—Fed. R. Civ. P. 12(b)(2)*

a. Personal jurisdiction generally

A federal district court in a patent litigation also must have personal jurisdiction over the defendant as it would in any other type of matter.[52] A defendant's residence in the forum state is generally sufficient by itself to establish personal jurisdiction over that defendant.[53]

b. Standard for personal jurisdiction under Federal Circuit law

The Federal Circuit applies its own law, rather than that of the regional circuits, in determining whether personal jurisdiction exists over an out-of-state defendant in a patent suit.[54] If a suit involves both patent and nonpatent claims, Federal Circuit law also applies to personal jurisdiction for nonpatent claims if "the resolution of the patent infringement issue will be a significant factor" in determining liability under the nonpatent claims.[55] Federal Circuit law on personal jurisdiction is often more permissive than that of the forum state or the relevant circuit's interpretation of the forum state's law.

The district court must first examine whether the defendant must have sufficient "minimum contacts" with the forum, such "that [it] should reasonably anticipate being haled into court there."[56] One basis for establishing purposeful minimum contacts is that the accused infringer placed a substantial amount of the infringing product into the "stream of commerce," conscious that such goods will be sold in the forum state.[57] This stream of commerce theory also applies where the defendant is the patentee.[58]

---

52. VE Holding Corp. v. Johnson Gas Appliance Co., 917 F.2d 1574, 1583 n.20 (Fed. Cir. 1990).

53. Milliken v. Meyer, 311 U.S. 457, 462–63 (1940).

54. Beverly Hills Fan Co. v. Royal Sovereign Corp., 21 F.3d 1558, 1564 (Fed. Cir. 1994).

55. 3D Sys., Inc. v. Aarotech Labs., Inc., 160 F.3d 1373, 1377 (Fed. Cir. 1998).

56. Redwing Shoe Co. v. Hockerson-Halberstadt, Inc., 148 F.3d 1355, 1358 (Fed. Cir. 1998) (quoting World-Wide Volkswagen Corp. v. Woodson, 444 U.S. 286, 297 (1980)).

57. *E.g.*, N. Am. Philips Corp. v. Am. Vending Sales, Inc., 35 F.3d 1576, 1580 (Fed. Cir. 1994); *Beverly Hills Fan*, 21 F.3d at 1566.

58. *See* Viam Corp. v. Iowa Export-Import Trading Co., 84 F.3d 424, 428 (Fed. Cir. 1996).

The court must next examine whether the claim "arises out of or relates to" the defendant's activities in the forum.[59] This analysis is largely fact-specific, and courts typically look to the quality of the activity in the forum and its relationship to the plaintiff's claim.[60] For example, in a declaratory judgment action, the patentee sending cease-and-desist letters to the forum is by itself insufficient to satisfy the jurisdictional requirement.[61] Such letters, however, may help establish jurisdiction in conjunction with other activities that provide additional contacts with the forum and relate to the underlying claim.[62]

Even if the first two prongs of the analysis are satisfied, a defendant may challenge jurisdiction if it can make "a compelling case that the presence of some other considerations would render jurisdiction unreasonable."[63] The factors that a court may consider in determining whether an exercise of jurisdiction would be unreasonable include: (1) the burden on the defendant; (2) the forum state's interest in adjudicating the dispute; (3) the plaintiff's interest in obtaining convenient and effective relief; (4) the interstate judicial system's interest in obtaining the most efficient resolution of controversies; and (5) the "shared interest of the several States in furthering fundamental substantive social policies."[64] The Federal Circuit has commented that, "[i]n general, these cases are limited to the rare situation in which the plaintiff's interest and the state's interest in adjudicating the dispute in the forum are so attenuated that they are clearly outweighed by the burden of subjecting the defendant to litigation within the forum."[65]

c. Exercise of jurisdiction based on extraterritorial conduct

The personal jurisdiction analysis set forth above may be used by a court to assert personal jurisdiction over a non-U.S. resident.[66] In ad-

---

59. *See* Breckenridge Pharm., Inc. v. Metabolite Labs., Inc., 444 F.3d 1356, 1361 (Fed. Cir. 2006).

60. *See* Akro Corp. v. Luker, 45 F.3d 1541, 1543 (Fed. Cir. 1995).

61. *See Redwing Shoe,* 148 F.3d at 1360.

62. *See, e.g.*, Genetic Implant Sys. Inc. v. Core-Vent Corp., 123 F.3d 1455, 1458 (Fed. Cir. 1997) (minimum contacts established where patentee engaged "in a program to develop a market" in the forum where accused infringer resided).

63. *Akro*, 45 F.3d at 1549.

64. *Breckenridge*, 444 F.3d at 1367.

65. *Beverly Hills Fan*, 21 F.3d at 1568.

66. *See, e.g., id.* at 1567–68.

dition, a party may be subject to jurisdiction in a U.S. court in certain instances in which the alleged infringing activities occurred outside of the United States.[67]

4. *Improper venue—Fed. R. Civ. P. 12(b)(3)*

Venue in patent infringement cases is governed by 28 U.S.C. § 1400(b), which provides that a patent infringement suit may be brought in any judicial district where (1) "the defendant resides" or (2) "the defendant has committed acts of infringement and has a regular and established place of business."[68] Satisfying the venue requirement for patent cases is therefore much less rigorous than in other areas of the law, allowing substantial room for forum shopping. If the defendant is a corporation, it is deemed for purposes of venue to reside in any district where there would be personal jurisdiction over the corporation at the time the action is commenced.[69] If the defendant is an alien, it may be sued for infringement in any district, irrespective of § 1400(b).[70]

In declaratory judgment actions, the general venue provision, 28 U.S.C. § 1391(b), applies rather than § 1400(b).[71] Section 1400(b) also does not apply to a suit by a patent owner asserting rights under contract or tort law, for instance, even if the suit involves patent issues.[72]

If a court finds that venue is improper, it may in its discretion either dismiss the case or, "in the interest of justice," transfer the case to another district.[73] Because a dismissal for improper venue does not touch the merits and would be without prejudice,[74] a plaintiff may subsequently refile its lawsuit in any proper district provided the claim is not barred by any statute of limitations.

In order to avoid "time-consuming and justice defeating technicalities," a court may transfer a case under § 1406(a) (assuming the

---

67. *See* 35 U.S.C. §§ 271(h), (g) (2000).

68. 28 U.S.C. § 1400(b) (2000); VE Holding Corp. v. Johnson Gas Appliance Co., 917 F.2d 1574, 1577–78 (Fed. Cir. 1990).

69. 28 U.S.C. § 1391(c) (2000); *VE Holding*, 917 F.2d at 1578.

70. 28 U.S.C. § 1391(d) (2000); Brunette Mach. Works, Ltd. v. Kockum Indus., Inc., 406 U.S. 706, 706 (1972).

71. *VE Holding*, 917 F.2d at 1583.

72. Koratron Co. v. Deering Milliken, Inc., 418 F.2d 1314 (9th Cir. 1969), *cert. denied*, 398 U.S. 909 (1970).

73. 28 U.S.C. § 1406(a) (2000).

74. *See In re* Cordis Corp., 769 F.2d 733, 737 (Fed. Cir. 1985).

standards for transfer under that section are satisfied) regardless of whether it lacked personal jurisdiction over the defendants.[75]

5. *Motion to dismiss for failure to state a claim upon which relief may be granted—Fed. R. Civ. P. 12(b)(6)*

Under Rule 12(b)(6), a defendant may move to dismiss a claim for failure to state a claim upon which relief can be granted. Application of Rule 12(b)(6) in patent cases is a procedural question and is therefore governed by the law of the regional circuits.[76]

B. Motion to Strike

1. *Inequitable conduct*

a. Standard

Federal Rule of Civil Procedure 12(f) allows a court to strike from "any pleading any insufficient defense." Rule 9(b) requires that "in all averments of fraud or mistake, the circumstances constituting fraud or mistake shall be stated with particularity." Although the Federal Circuit has not directly ruled on whether or not Rule 9(b) applies to inequitable conduct, the majority of district courts have held that inequitable conduct before the PTO is a form of fraud subject to the rule.[77] Thus, in most district courts, Rule 12(f) in conjunction with Rule 9(b) allows either a party or the court upon its own initiative to strike an allegation of inequitable conduct if it is not pled with sufficient particularity.[78]

A proper pleading of inequitable conduct requires that the party allege that the patentee, with intent to mislead, failed to disclose material information (or submitted false information) to the PTO.[79] For the intent element, alleging that the patentee acted "willfully or with gross negligence" is sufficient.[80]

---

75. Goldlawr, Inc. v. Heiman, 369 U.S. 463, 466–67 (1962).

76. Polymer Indus. Prods. Co. v. Bridgestone/Firestone, Inc., 347 F.3d 935, 937 (Fed. Cir. 2003).

77. *See, e.g.*, Samsung Elec. Co. Ltd. v. Texas Instr. Inc., 39 U.S.P.Q.2d 1673, 1675 (N.D. Tex. 1996); *but see* Quantum Corp. v. Western Digital Corp., 10 U.S.P.Q.2d 1712, 1713 (N.D. Cal. 1988) (holding that allegations of inequitable conduct are not subject to Rule 9(b)).

78. *See, e.g.*, Chiron v. Abbott Lab., 156 F.R.D. 219, 220–21 (N.D. Cal. 1994).

79. *See* Baxter Int'l Inc. v. McGaw, Inc., 149 F.3d 1321, 1327 (Fed. Cir. 1998).

80. J.P. Stevens & Co. v. Lex Tex Ltd., 747 F.2d 1553, 1560 (Fed. Cir. 1985).

Most district courts have also required that allegations of inequitable conduct identify particular alleged fraudulent representations or omissions to satisfy Rule 9(b).[81] Specifically, many have required that the "time, place and content of any fraudulent representation" be pled with particularity.[82] For example, allegations that the patentee "falsified inventorship," "mischaracterized . . . prior public usages," and "misrepresented material facts" are overly broad and do not rise to the level of particularity that Rule 9(b) requires.[83]

For information on bifurcation of inequitable conduct from the case in chief, see *infra* Chapter 10.A.1.

b. Timing

Under Rule 12(f), the motion to strike allegations of inequitable conduct for failure to plead with particularity must be made by a party within twenty days after service of the pleading. However, the court may bring the motion at any time on its own initiative.[84] Because many courts are loath to allow inequitable conduct claims to proceed in the absence of a good-faith basis for their assertion, courts often challenge the grounds for these claims at the first case-management conference.

---

81. *See, e.g.*, Sun-Flex Co. Inc. v. Softview Computer Prods. Corp., 750 F. Supp. 962, 963–64 (N.D. Ill. 1990).

82. *See, e.g.*, *id.*; N. Eng'g & Plastics Corp. v. Blackhawk Molding Co., Inc., 189 U.S.P.Q. 734, 734 (N.D. Ill. 1975); *but see Chiron*, 156 F.R.D. at 223 (requiring only that the pleading "specify the nature of the deception it alleges").

83. *Sun-Flex*, 750 F. Supp. at 963.

84. *Id.*

Chapter 4: Answer and Counterclaims[85]

In a patent case, after the usual denial of most of the allegations in the complaint, the defendant will assert defenses. Section 282 of the patent statute identifies several defenses, including noninfringement, invalidity, and unenforceability. Other defenses, such as laches, estoppel, and misuse, are based on common law. Because many of these defenses are asserted as a matter of course in all patent cases (as if by script), many district courts inquire at the case-management conference to determine which are really at issue. The defenses in patent cases themselves require substantial discovery and motion practice, so it is just as important to narrow the defenses early in the case as it is to rein in the claims asserted by the plaintiff.

The defendant may also assert counterclaims for declaratory judgment that mirror defenses and independent claims.

A. Affirmative Defenses

1. Invalidity of the patent

Patents are presumed valid under 35 U.S.C. § 282, and the party asserting invalidity has the burden of proof by clear and convincing evidence. Some bases to assert invalidity are detailed in the subsections below.

a. Section 101

One defense, based on 35 U.S.C. § 101 and not often asserted, alleges that the claimed invention is not within the statutory classes of subject matter (e.g., a process or machine) but instead is directed to a pure idea or mental process, or is inoperable. Another § 101-based defense is double patenting, which may be asserted when two patents issue for the same or similar inventions. The doctrine seeks to prevent the unjustified extension of patent exclusivity beyond the term of a patent.

---

85. Lawrence B. Goodwin, Kasowitz Benson Torres & Friedman LLP, New York, New York. The assistance of Chanah Brenenson and Steven D. Chin in preparing this material is greatly appreciated.

b. Section 102

A patented invention must be new. If any one of the conditions set forth in § 102 is not met, an invention is not new, and thus a patent on that invention would be invalid. If the "prior art" "anticipates" the claimed invention, the anticipated claims are invalid. Anticipation is a fact issue and must be proved by clear and convincing evidence.

Under § 102(a), if the claimed invention was known or used in the United States, or patented or described in a publication anywhere in the world, before the patentee's date of invention, the claim lacks novelty and is invalid. Similarly, under § 102(e), if the claimed invention was described in a U.S. patent application filed in the United States before the plaintiff patentee's date of invention, the claim lacks novelty and is invalid. In many cases, if defenses are raised under either § 102(a) or (e), the patentee will assert that the invention date predates the defendant's alleged prior art, and thus the patent is not invalid.

Section 102(b) defines prior art as disclosures of the invention in patents or publications anywhere in the world, or public use or sale of the invention in the United States, more than one year before the U.S. filing date of the application for the plaintiff's patent. Thus, unlike § 102(a) and (e), prior art under § 102(b) will invalidate the patent regardless of the date of the patentee's invention so long as the prior art predates the patent's filing date by more than one year.

Although less commonly asserted, a defendant may raise bases of invalidity under § 102(c) (abandonment) or 102(d) (foreign patent application filed more than one year before the date of the patentee's U.S. filing).

Section 102(g) is the so-called "interference" statute that allows a defendant to prove that someone invented the claimed subject matter in the United States before the patentee's invention. Section 102(g) is sometimes invoked by the defendant in response to the plaintiff patentee's assertion that his or her invention date was prior to the filing date of a prior patent that otherwise would have been prior art under § 102(e).

c. Section 103

Section 103 requires the patented subject matter to be "nonobvious."[86] Thus, even if no single prior-art reference anticipates the claimed invention, § 103 can operate as a defense if the defendant can show, by clear and convincing evidence, that a person of ordinary skill in the art would have found the claimed invention obvious in view of prior art defined in § 102(a), (b), (e), or (g).

d. Section 112

Invalidity may also be based on noncompliance with § 112. Paragraph 1 of § 112 contains the enablement and written-description requirements of patentability. To meet the enablement requirement, a patent's specification must enable those skilled in the relevant art to make and use the invention without undue experimentation. To comply with the written-description requirement, a patent's specification must contain information sufficient "to show that the inventor possessed the claimed invention at the time of the original disclosure." Paragraph 1 of § 112 also requires that the patent set forth the best mode contemplated by the inventor for carrying out his invention (the so-called "best-mode" requirement). The best-mode requirement is subjective; the inventor's subjective best mode must be disclosed, even if there are other, different modes of operation that are in fact better.

Paragraph 2 of § 112 can also serve as a defense if the claims are indefinite, i.e., they do not clearly point out and distinctly claim the inventive subject matter. If a person skilled in the relevant art would not be able to discern the meaning of the claims, the claims violate paragraph 2 of § 112.

e. Other matters relating to an invalidity defense

Validity is analyzed on a claim-by-claim basis. Each claim of a patent must be separately assessed for validity. For example, an independent claim might be invalid under § 102(b) because of an on-sale bar (i.e., the product embodying the defined invention was on sale more than one year before the patent application was filed), but a dependent claim, or another independent claim, might not be invalid because it contains limitations that were not in the product on sale. In some

86. *See* KSR Int'l Co. v. Teleflex Inc., 127 S. Ct. 1727 (2007).

cases, there are so many asserted patent claims that analysis becomes unwieldy. If the parties stipulate that a certain claim is representative of a group of claims, then the validity resolution of the representative claim applies to all the other claims in the group.

A finding of noninfringement does not render a counterclaim for invalidity moot. A party seeking declaratory judgment of invalidity presents a claim independent of the patentee's charge of infringement. Moreover, the determination of validity has greater public importance than infringement.

2. *Inequitable conduct in obtaining the patent*

People involved in the prosecution of a patent application have a duty of candor and good faith in dealing with the Patent and Trademark Office. The intentional failure to meet the duty of candor and good faith constitutes inequitable conduct. The duty is breached by a misrepresentation of a material fact or failure to disclose material information. Inequitable conduct related to any of the claims in the patent bars enforcement of the entire patent by the patent holder.

To establish that a patent is unenforceable, the defendant must show by clear and convincing evidence that (1) the information withheld or misrepresented was material to the patentability of the invention; and (2) the duty of candor was breached with intent to deceive or mislead the Patent and Trademark Office. Once the challenger has shown the requisite levels of materiality and intent, the court must balance the equities to determine whether the patentee has committed inequitable conduct that warrants holding the patent unenforceable. When balanced against high materiality, the showing of intent can be proportionally less.

Although the Patent and Trademark Office has specifically defined materiality in 37 C.F.R. § 1.56(b), the Federal Circuit has held that other tests for materiality can be used as well.[87] The broadest is the so-called "reasonable examiner" test: whether "a reasonable examiner would have considered such prior art important in deciding whether to allow the patent application."

Information that is cumulative of the information already in the prosecution file is not material. Because the issue is unenforceability

87. Digital Control Inc. v. Charles Mach. Works, 437 F.3d 1309 (Fed. Cir. 2006).

and not invalidity, the information need not be the type of information that would sustain an invalidity defense; it need only be material to such matters.

3. *License or implied license*

Infringement is the unauthorized use of the patented product or process. Thus, a showing by the defendant that the use was authorized will defeat the claim of infringement. The term "use" in this context refers generally to the accused infringing activity. One way to establish that the use was noninfringing is based on a license or implied license. When the patentee and accused infringer are parties to an express license agreement, the dispute may be over whether the products are covered by the license.

The implied license defense is often based on the first-sale or exhaustion doctrine. Once the patentee already receives due compensation for the sale of a product, the patentee is not entitled to double or repeated compensation for subsequent sales or uses of that product. For example, resale of a product that was purchased from an authorized seller cannot constitute infringement. "To invoke the protection of the first sale doctrine, the authorized first sale must have occurred under the United States Patent."[88]

Another common circumstance giving rise to an implied license is when the patentee sells equipment for making its patented invention. In the absence of circumstances tending to show the contrary, if the plaintiff sells a product or equipment that has no noninfringing uses, that sale includes an implied license to practice the invention. This principle was applied to a case where the patentee sold two components separately but the patent covered only the combination of the two parts. The court found that the customers who purchased one of the components from the patentee had an implied license to practice the invention, which was a defense against contributory infringement by an unauthorized seller of the second component.

The existence of an implied license is a question of law, based on underlying facts that the defendant must prove by a preponderance of the evidence.

---

88. Jazz Photo Corp. v. United States ITC, 264 F.3d 1094 (Fed. Cir. 2001).

4. *Limitations on damages*

Under 35 U.S.C. § 286, the period for damages is limited to six years before filing the complaint or the counterclaim for infringement. The infringement suit may be filed after the patent expires, provided the damages are limited to the period starting not more than six years before filing the lawsuit and ending no later than the patent expiration.

Section 287 is the "marking and notice" statute. It provides a limitation on damages that occur prior to actual notice of infringement, under certain circumstances. If the patent owner, or someone with his or her authority (a licensee), makes, sells, or offers to sell in the United States a product covered by the patent, damages are only available after the patent owner notifies the alleged infringer of its infringement. The actual notice requirement is satisfied when the recipient is informed of the identity of the patent and the activity that is believed to be an infringement, accompanied by a proposal to abate the infringement, whether by license or otherwise. If actual notice of infringement is required, it must be given even if the accused infringer is independently aware of the patent. Notice may also be satisfied by marking the patentee or licensee's products with the patent number. Section 287 does not apply if the patent owner, or anyone with his or her authority, does not make, sell, or offer to sell any products under the patent in the United States. Also, this limitation does not apply to patents containing exclusively method claims.

5. *Equitable defenses: laches and estoppel*

The premise underlying the equitable defenses of laches and estoppel is that the patentee's delay or misleading conduct tips the scales of justice in favor of the defendant. By engaging in improper conduct, the patentee forfeits what would otherwise be rightful compensation for the defendant's infringement.

a. Laches

"Two elements underlie the defense of laches: (a) the patentee's delay in bringing the suit was unreasonable and inexcusable, and (b) the alleged infringer suffered material prejudice attributable to the delay."[89]

---

89. A.C. Aukerman Co. v. R.L. Chaides Constr. Co., 960 F.2d 1020 (Fed. Cir. 1992) (en banc).

The patentee may negate the laches defense by establishing an excuse or justification for the delay. Excuses that may be offered in some instances include negotiations with the accused infringer, poverty or illness under limited circumstances, wartime conditions, and dispute over patent ownership and extent of infringement. Another excuse is when the patentee is involved in other litigation, and generally (though not a rigid rule) the defendant is aware of the other pending litigation. Sometimes the inequity of the patentee's conduct is negated by evidence of egregious conduct on the part of the defendant. For example, when the patentee can demonstrate that the defendant deliberately copied or otherwise knowingly infringed the patent, this evidence may temper the evidence of patentee's laches.

When the delay is more than six years from the time that the patentee has knowledge of the infringement, there is a rebuttable presumption of laches. The defendant at all times bears the burden of persuasion to establish the laches defense. Upon proof that the delay exceeded six years, by reason of the presumption, absent other equitable considerations, the defendant makes a prima facie defense of laches. If the patentee presents sufficient evidence that, if believed, would preclude a finding in favor of the infringer, then the presumption evaporates and the infringer is left to its proof. The courts may have chosen the six-year limit because it is the statutory limitation on damages; however, these two six-year periods are in theory completely unrelated.

Where the defense of laches is established, the court may bar the patentee from recovering damages that accrued before the lawsuit.

b. Equitable estoppel

Equitable estoppel completely bars a patentee's claim. There are three elements for establishing equitable estoppel: "(a) The patentee, through misleading conduct, leads the alleged infringer to reasonably infer that the patentee does not intend to enforce its patent against the alleged infringer. 'Conduct' may include specific statements, action, inaction, or silence where there was an obligation to speak. (b) The alleged infringer relies on that conduct. (c) Due to its reliance, the alleged infringer will be materially prejudiced if the patentee is allowed to proceed with its claim."[90]

90. *Id.* at 1028.

Equitable estoppel does not require the passage of an unreasonable period of time before filing the suit. To contrast the two defenses: Laches focuses on the reasonableness of the plaintiff's delay; equitable estoppel focuses on what the defendant is lead to believe from plaintiff's conduct.

The defense of equitable estoppel requires some sort of communication between the parties. The patentee must have communicated something to the infringer in a misleading way. To contrast the two defenses: Laches may be established with or without communication between the parties before the lawsuit; equitable estoppel will only be established with evidence of communication from or conduct by the patentee before the lawsuit.

The infringer must show that the patentee's communication or conduct supports an inference that the patentee did not intend to press an infringement claim against the infringer. Again, to contrast the two defenses: Laches may be established even though the infringer did not know of the patentee or the patent before the lawsuit; for equitable estoppel, the infringer must have known of the patentee and the patent, and the patentee must have had knowledge of the infringer's activities.

Where an alleged infringer establishes the defense of equitable estoppel, the patentee's claim for damages, as well as injunctive relief, may be entirely barred.

6. *Patent misuse*

The defense of patent misuse "relates generally to the use of patent rights to obtain or to coerce an unfair commercial advantage [so to] extend the economic effect beyond the scope of the patent grant."[91] "The concept of patent misuse arose to restrain practices that did not in themselves violate any law, but that draw anticompetitive strength from the patent right, and thus were deemed to be contrary to public policy."[92]

Patent misuse is viewed as a broader wrong than an antitrust violation because of the economic power that may be derived from a patentee's right to exclude. Thus, misuse may arise even when there are

91. C.R. Bard, Inc. v. M3 Sys., Inc., 157 F.3d 1340, 1372 (Fed. Cir. 1998).

92. *Id.* (quoting Mallinckrodt, Inc. v. Medipart, Inc., 976 F.2d 700, 703–04 (Fed. Cir. 1992)).

no violations of antitrust law. The key inquiry in patent misuse is determining whether, by imposing conditions that derive their force from the patent, the patentee has impermissibly broadened the scope of the patent grant with anticompetitive effect. "In cases where the patentee imposes restrictions on the use of its invention, if the restriction is reasonably within the patent grant, the patent misuse defense can never succeed. In cases in which a condition controlling the use of a patented invention extends beyond the patentee's statutory right to exclude, however, either a per se rule of patent misuse or a rule of reason analysis must be applied."[93] Patent misuse arises in equity, and a holding of misuse renders the patent unenforceable until the misuse is purged; misuse does not, of itself, invalidate the patent.

Congress, however, has expressly defined certain practices as not constituting patent misuse. Below is the excluded conduct set forth in the patent statute:

1. deriving revenue from acts that would otherwise constitute contributory infringement of the patent;
2. licensing or authorizing another to perform acts that would otherwise constitute contributory infringement of the patent;
3. seeking to enforce patent rights against infringement or contributory infringement, such as bringing a lawsuit;
4. refusing to license or use any rights to the patent; or
5. in the absence of the relevant market power, using a tying arrangement, i.e., conditioning a patent license or the sale of the patented product on the license of another patent or purchase of a separate product.[94]

B. Counterclaims

1. Antitrust counterclaims

Patentees have a statutory right to bring a civil suit in federal court against infringers. However, some conduct may incur antitrust liability, including: (1) the enforcement of a patent known to be obtained by fraud; (2) bringing a sham litigation; (3) tying the license of a patent to

93. Monsanto Co. v. Homan McFarling, 363 F.3d 1336, 1341 (Fed. Cir. 2004) (internal citations omitted).

94. 35 U.S.C. § 271(d) (2000).

the purchase of unpatented goods; or (4) creating an overall scheme to use the patent to violate the antitrust laws.

The two most common antitrust counterclaims involve allegations that the patentee has violated the antitrust laws by enforcing a patent knowingly obtained by fraud or by bringing a sham litigation. These counterclaims are referred to as *Walker Process*[95] and *Handgards*[96] claims, respectively. To prove a *Walker Process* claim, a defendant must demonstrate that the patentee (1) obtained the patent by knowingly and willfully misrepresenting facts to the Patent Office and (2) was aware of the fraud at the time the suit was brought. If these elements are met, a patentee may be stripped of its exemption from the antitrust laws, and antitrust liability exists if the defendant can establish the necessary additional elements of a violation of the antitrust laws. A defendant asserting an antitrust counterclaim based on a *Handgards* sham-litigation theory must demonstrate that (1) the lawsuit is objectively baseless and (2) the baseless lawsuit "conceals an attempt to interfere directly with the business relationships of a competitor" through the litigation process—as opposed to the plaintiff seeking a just outcome through litigation.

2. *Unfair competition claims*

The defendant may also assert a counterclaim for unfair competition under the Lanham Act or state law. Such claims typically center around statements made by the patentee to the defendant's customers claiming that customers and/or the defendant infringe. While a patentee has the right to publicize its patent rights and to make allegations of infringement, such claims cannot be made in bad faith. For example, if a patentee knows that its patent is invalid or not infringed, yet represents to the marketplace that a competitor is infringing, such conduct would constitute bad faith and support a claim of unfair competition.

3. *Tortious interference claims*

A defendant may also assert counterclaims based on state-law tort causes of action, such as tortious interference with contracts, prospective contracts, and business relations. As with unfair-competition

---

95. *See* Walker Process Equip., Inc. v. Food Mach. & Chem. Corp., 382 U.S. 172 (1965).
96. *See* Handgards, Inc. v. Ethicon, Inc., 601 F.2d 986 (9th Cir. 1979).

claims, such claims are often founded on the patentee's improper behavior in the marketplace, e.g., by making baseless claims regarding infringement to a defendant's customers.

4. *Declaratory judgment of noninfringement, invalidity, or unenforceability*

In addition to pleading noninfringement, invalidity, and/or unenforceability as affirmative defenses, a defendant will usually assert a counterclaim for a declaratory judgment on these grounds as well. This allows the defendant to seek affirmative relief on these grounds even when a patentee dismisses its claims against the defendant or when the court enters judgment against a patentee at any stage of the proceedings. Thus, for example, under Federal Rule of Civil Procedure 58, an order of final judgment may not be entered following summary judgment of noninfringement on all of plaintiff's claims where counterclaims of invalidity have been asserted. Instead, the court must proceed to adjudicate those claims, even if it finds it unnecessary to do so to resolve the infringement claims that prompted the litigation in the first instance.

Blank pages inserted to preserve pagination when printing double-sided copies.

Chapter 5: Preliminary Injunction Motions[97]

Although 35 U.S.C. § 283 specifically provides that preliminary injunctions may be issued in patent cases, they remain an extraordinary remedy "not to be routinely granted."[98] Courts have discretion as to whether or not to grant a preliminary injunction, based on the four traditional equitable factors for such an injunction:

- the likelihood of success on the merits of the underlying litigation;
- whether immediate irreparable harm will result if the relief is not granted;
- whether the balance of hardships to the parties weighs in the movant's favor; and
- whether the public interest is best served by granting the injunctive relief.

A. Likelihood of Success on the Merits

To establish a likelihood of success on the merits, a patentee must show that its patent is valid, enforceable, and infringed. These determinations follow the same substantive law used to determine these issues at trial, but with some adjustment to the relative burdens of going forward with evidence and persuasion. For example, while the patentee must demonstrate a likelihood of success in light of the presumptions and burdens that will inhere at trial, an accused infringer need only raise a "substantial question" concerning validity, enforceability, or infringement.[99]

1. Infringement

A showing of infringement at the preliminary injunction stage follows the same two-step process used to determine infringement at trial: construing the claims of the patent-in-suit and comparing them to the accused device. Thus, the Federal Circuit has directed district courts to

---

97. Joseph A. Calvaruso, Orrick, Herrington & Sutcliffe, New York, New York.

98. High Tech Med. Instrumentation, Inc. v. New Image Indus., Inc., 49 F.3d 1551, 1554 (Fed. Cir. 1995).

99. *See, e.g.*, Abbott Labs. v. Andrx Pharms., Inc., 452 F.3d 1331 (Fed. Cir. 2006).

begin any preliminary injunction analysis with construction of those claims upon which the request for preliminary relief is premised. However, claim construction conducted at the preliminary injunction stage need not be considered final for the rest of the case, because it is usually based on an incomplete record and an accelerated process. The court may therefore alter or expand on its claim construction to the extent appropriate at later stages of the litigation. For more on infringement, see *supra* Chapter 2.A.

2. *Invalidity*

Unlike at trial, where the accused infringer must prove invalidity by clear and convincing evidence, a preliminary injunction should be denied if the accused infringer asserts an invalidity defense that the patentee cannot prove lacks "substantial merit." In responding to the accused infringer's invalidity position, the patentee need not establish validity "beyond question," but it does need to present a "clear case" supporting the validity of the patent-in-suit, which can be done by showing that the patent succeeded against invalidity challenges in the past or by establishing a history of industry acquiescence to the patent.

B. Irreparable Harm

Although the patentee must demonstrate that it will suffer irreparable harm in order to receive a preliminary injunction, the patentee is entitled to a rebuttable presumption of irreparable harm if it makes out a "strong showing" as to its likelihood of success. The presumption may be rebutted by evidence that (1) the accused infringer has ceased or will soon cease the allegedly infringing activities, thus making an injunction unnecessary; (2) the patentee has engaged in a pattern of granting licenses under the patent, such that it may be reasonable to expect that invasion of the patent right can be recompensed with a royalty rather than with an injunction; or (3) the patentee unduly delayed in bringing suit. The patentee may rebut a claim that it unduly delayed suit by showing that the delay was caused by settlement negotiations, pursuing suits against other infringers, or other defenses to a claim of laches. *See supra* Chapter 4.A.5.a.

As a general matter, an allegation of irreparable harm cannot be rebutted by a showing that the patentee's business is being harmed by other infringers, market conditions, or poor business decisions made

by the patentee, rather than the accused infringer's conduct. However, evidence of other infringers may support a finding of unreasonable delay in bringing suit, willingness to accept royalties in lieu of market exclusivity, or indifference in enforcing one's patent.

Even if the patentee is not entitled to a presumption of irreparable harm, the patentee may demonstrate irreparable harm affirmatively by showing potential lost sales, loss of market share and goodwill, or the accused infringer's inability to satisfy a judgment for damages. Nevertheless, a showing of potential lost sales is insufficient to demonstrate irreparable harm if other factors weigh against irreparable harm. Moreover, simply showing that an accused infringer has sufficient funds to fully compensate the patentee with monetary damages is insufficient to negate irreparable harm because it ignores the accused infringer's effect on the patentee's right to market exclusivity.

C. Balance of Hardships

To obtain a preliminary injunction, the patentee need not prove that the balance of hardships weighs in its favor, but it will typically make the same arguments it used to demonstrate irreparable harm. The court may also consider the relative sizes of the parties, whether the patentee had an exclusive position in the market, the relative effect on the business of the parties, or the relative timing of the parties' entry into the market. The mere fact that an accused infringer might be put out of business by the injunction does not insulate it when the other preliminary injunction factors tip the balance in favor of the patentee.

D. Public Interest

In most cases, the public interest in enforcing valid patents outweighs the lower prices afforded by competition, resulting in this factor favoring the patentee. Nevertheless, the public interest may favor the accused infringer when enjoining the accused product would otherwise affect public health or safety. Moreover, district courts may decline to enter a permanent injunction where the patentee has no plans to market a useful product and the injunction would deprive the public of such a product.

Blank pages inserted to preserve pagination when printing double-sided copies.

Chapter 6: The Case-Management Conference[100]

Successfully handling a patent case begins with the case-management conference. Patent cases typically involve complex technologies, challenging legal questions, and unique discovery issues not found in other civil litigation. It thus behooves the court and the parties to appreciate early the unique aspects of a patent case.

A. Conference Checklist

Below is a checklist of issues for the case-management conference that courts can consider discussing with the parties:

Ask for an informal description of the technology

Require a brief statement/summary of claims and defenses by each party

- Is the alleged infringement:
  - Literal
  - Indirect: inducement or contributory
- Does the doctrine of equivalents apply?
- Special issues relating to willfulness:
  - Timing of the assertion of the claim
  - Timing of the reliance on any opinion of counsel
  - Possibility of bifurcation
  - Possibility of disqualification of counsel
- Is alleged invalidity based on:
  - Anticipation
  - Obviousness

100. George F. Pappas, Covington & Burling LLP, Washington, D.C. The assistance of Kevin B. Collins and Scott C. Weidenfeller in preparing this material is greatly appreciated.

  - On-sale bar
  - Prior public use
  - Lack of written description
  - Lack of enablement
  - Failure to disclose best mode
- If inequitable conduct is pleaded, the parties should:
  - Identify material misrepresentations or omissions
  - Identify evidence of intent to mislead
  - Address possible disqualification of counsel who obtained the patent
- Antitrust claims/unfair competition claims
  - Should they be severed?
- Relief sought:
  - Permanent injunction
  - Damages:
    - Reasonable royalty
    - Lost profits
    - Price erosion
    - Convoyed sales
  - Limitations on damages:
    - Laches
    - Estoppel
    - Notice and marking
- Discussion of alternative dispute resolution (ADR):
  - Usefulness
  - Timing
  - Mediation or arbitration

Determine whether a protective order will be needed

- Seek agreement of the parties

- Access to confidential information often limited based on:
  - Sensitivity of information and whether disclosure could cause substantial harm to opposing party's competitive position
  - Whether individual is engaged in "competitive decision making," e.g., patent strategy, licensing negotiations, sales and marketing, and research and development in relevant product market
- Have a form protective order if no agreement within specified period

Consider an order on electronic discovery issues

- Rule 16 provides that court may provide for disclosure and discovery of electronically stored information or include agreements reached by parties
- Encourage agreements as to scope of search, including search terms, custodians and witnesses to respond, relevant time period
- Need to require preservation of electronically stored information
- Consider default standard absent agreement between the parties

In determining the length of time needed for fact discovery:

- Consider bifurcating discovery
  - Claim construction/infringement issues
  - Infringement/validity/inequitable conduct issues
  - Infringement/willful infringement issues
  - Liability/damages issues
- Ask if foreign discovery will be necessary
  - Depositions of foreign nationals in their respective countries (Hague Convention or by agreement)

  - Depositions of foreign nationals in United States (with translators)
  - Document production in foreign countries
  - Volume of documents requiring translations

Determine length of time needed for expert discovery

- Usually three rounds—party with burden of proof or burden of production goes first:
  - First round—plaintiff on infringement, defendant on invalidity and inequitable conduct
  - Second round—each party files responsive reports and plaintiff produces opinions on objective factors on nonobviousness
  - Third round—defendant responds only to opinions on objective factors of nonobviousness

Consider limitations on discovery

- Number of total hours for fact witnesses or number of depositions; should you vary from federal or local rules?
- Location of depositions
- Discoverability of invention disclosures, opinions of counsel, and patents closely related to those at issue in the case

Determine need for tutorials

- How do you want to learn about the technology in the case?
  - Tutorial by counsel in court
  - Tutorial by experts in court
  - DVDs from each side for use by court at any time
  - Court-appointed expert

Set timing and procedures for *Markman* process

- Prior to construing claims, require a joint statement identifying what claims are in dispute, the parties' re-

spective interpretations, and all evidentiary support for their proposed construction

- Decide when to construe claims
  - Close of fact discovery
  - Close of expert discovery
  - Other appropriate time
- Limit the disputed claim terms to those that are essential to resolving the case
- Require simultaneous opening legal briefs and responsive briefs
- Decide whether to hold a hearing
- If a hearing is held:
  - Prior to or at the hearing, expect a "walk through" of the patent identifying each of its parts, the file history, and any other proceedings before the PTO, such as an interference or reexamination, that bear on the claims to be construed
  - Consider whether to allow parties to call witnesses, e.g., the inventor or experts on the technology at issue and state of the art at the time of the invention
  - Encourage parties' use of graphics, animations and other visual displays to aid in understanding the technology and disputed claim terms

Determine timing of dispositive motions

- For threshold dispositive issues, motions prior to any claim construction
- Conduct a separate *Markman* hearing, followed by dispositive motions
- Combined *Markman* and summary judgment hearing

B. Local Rules

Overall, the court and the parties may wish to use all or a portion of local rules that have been adopted by district courts in Northern California, Southern California, Northern Georgia, Minnesota, New Jersey, Western Pennsylvania, Eastern Texas, Northern Texas, and Western Wisconsin. Alternatively, the court may wish to create a scheduling order tailored to the unique aspects of an individual case.

Any patent case is almost certain to proceed more efficiently if the issues identified in the checklist above are considered.

Chapter 7: Discovery Issues Unique to Patent Cases[101]

Several districts have adopted local patent rules,[102] most of which are versions of the rules in the Northern District of California; these rules govern discovery in a patent case. Even in districts that have not adopted such rules, many courts have adopted scheduling orders unique to patent cases, or the parties can agree to a case-management plan that mimics a designated set of local patent rules or a modified version of them.

A. Scheduling Considerations

Key scheduling considerations that the Federal Rule of Civil Procedure 26(f) conference can be used to resolve include the timing and presentation of claim construction (*Markman*) issues (see Chapter 8), limits on fact and expert discovery, and the possibility of using phased discovery for claim construction and other issues.

B. Disclosure of Infringement and Invalidity Contentions and Claim Construction Issues

Many patent rules provide for an orderly process of disclosure of the parties' contentions regarding the three main issues of every patent case: infringement, invalidity, and claim construction. To encourage full disclosure, the patent rules limit the parties' ability to amend their contentions.

1. Patentee's infringement contentions

The patent rules require that the patentee disclose its infringement contentions first, identifying each product or process it alleges infringes. The patentee uses a "claim chart" setting forth the limitations

---

101. George E. Bowles, FACTL, and Roy W. Hardin, Locke Liddell & Sapp LLP, Dallas, Texas.

102. The following districts have enacted local patent rules as of 2009: Northern District of California, Northern District of Georgia, Eastern District of Texas, and Western District of Pennsylvania.

of each asserted claim and pointing out completely and specifically how the accused products/processes satisfy each limitation, either literally or under the doctrine of equivalents.

The patent rules also require the patentee to disclose documents or other information in its possession that could be used to challenge the validity of the patent. Such information includes the patentee's sales or offers to sell products or processes covered by the patents-in-suit, which may not otherwise be available to the accused infringer.

2. *Accused infringer's invalidity contentions*

The patent rules give the accused infringer some time to complete its searches for prior art after the accused infringer receives the patentee's specific infringement allegations and invalidity information, at which time it must present, again in claim chart form, its invalidity contentions. The patentee's contentions often indicate how the patentee construes its own claims, and the accused infringer may respond accordingly.

The accused infringer must set forth in detail which prior-art publication or practice allegedly satisfies each limitation of the asserted patent claims. If a combination of references is required to satisfy all limitations of a claim, the accused infringer must disclose the evidence on which it relies to combine the references in that manner.

The patent rules also require the accused infringer to produce documents or other information in its possession that shows how the allegedly infringing products are constructed and operate, such as instructions, drawings, or source code. This information is necessary for the patentee to make out its infringement case.

3. *Parties' contentions regarding contested claim interpretation issues*

If the court decides that a separate *Markman* hearing procedure is warranted, it has become common practice to ask the parties to identify claim terms in issue by way of a claim chart identifying each such term, listing each party's proposed constructions of those terms, and setting forth the evidentiary support for each party's proposed constructions. This process narrows the issues and focuses the court on only the claim terms in dispute.

Because the parties' proposed claim constructions often reveal their theories in the case, the patent rules set forth a three-stage process

for preparing the claim chart to ensure neither party is placed at a disadvantage:

- First, the parties confer and agree on the terms in dispute. This exercise forces the parties to tell each other where the issues of the case lie.
- Second, the parties simultaneously exchange proposed definitions, so neither party can adjust its position in light of the definitions proposed by the other.
- Third, the parties again confer to determine if they can agree to the construction of additional terms and then construct the claim chart that they submit to the court.

The patent rules also require complete disclosure of documents and witness statements to be used in the claim construction process and require that deposition and other discovery be completed within a short time after the final claim chart is prepared.

C. Relevance and Limits of Discovery

Federal Circuit law controls whether particular written or other materials are discoverable in a patent case, because a determination of relevance implicates the substantive law of patent validity and infringement.[103] However, regional circuit law governs purely procedural discovery issues, such as discovery under the provisions of Rule 56(f).[104]

D. Attorney–Client Privilege and Waiver Issues

Questions of privilege and waiver arise frequently in patent litigation, most often in two areas. First, in applying for a patent, inventors and their counsel have a duty of candor and good faith before the Patent and Trademark Office. Failure to comply constitutes inequitable conduct that renders a patent unenforceable. Facts that counsel learn through communications with the inventors can end up being at the center of an inequitable conduct defense.

Second, to defend against an allegation of willful infringement or enhanced damages for an exceptional case, the accused infringer may

---

103. Truswal Sys. Corp. v. Hydro-Air Eng'g, Inc., 813 F.2d 1207, 1212 (Fed. Cir. 1987).
104. Vivid Techs., Inc. v. Am. Sci. & Eng'g, Inc., 200 F.3d 795, 807 (Fed. Cir. 1999).

argue that it exercised due care upon learning of the patent at issue.[105] A well-reasoned opinion from patent counsel can be a basis for a defense against such charges, but the accused infringer must produce the opinion, waiving the attorney–client privilege, to benefit from it.

1. *Questions of what qualifies as privileged*

The application of attorney–client privilege principles to communications between inventors and patent attorneys is an issue of substantive patent law to which Federal Circuit law, not regional circuit law, applies.[106] However, regional circuit law governs whether the privilege applies to communications with two different clients under the community-of-interest doctrine.[107]

2. *Waiver—its scope and effect*

Federal Circuit law applies to the issue of the extent to which a party waives its attorney–client privilege and work-product immunity when it asserts the advice-of-counsel defense in response to a charge of willful infringement. The assertion of such a defense waives the privilege in communications delivered to the client regarding infringement or validity, but the attorney work-product doctrine protects documents on those same issues if the documents have not been communicated to the client.[108]

3. *The timing issue*

Because an assertion of the advice-of-counsel defense acts as a waiver of privilege, the accused infringer ordinarily seeks to postpone disclosing any opinion of counsel as long as possible. As a result, discovery disputes can occur over when the accused infringer must elect to assert the advice-of-counsel defense and permit related discovery by the patentee. The patent rules handle this issue by providing for a specific date by which the accused infringer must produce relevant documents and a privilege log, or waive its right to rely on the defense.

---

105. *See In re* Seagate Tech. LLC, No. Misc. 830, 2007 WL 2358677 (Fed. Cir. 2007).
106. *In re* Spalding, 203 F.3d 800 (Fed. Cir. 2000).
107. *In re* Regents of the Univ. of Cal., 101 F.3d 1386, 1390 n.2 (Fed. Cir. 1996).
108. *In re* EchoStar Communications Corp., 448 F.3d 1294 (Fed. Cir. 2006).

E. Summary of the Discovery Order and Timing Suggested by Patent Rules

Start:	Case-management conference
10 days:	Disclosure of asserted claims and preliminary infringement contentions: • Infringement claim chart • Production of information related to prior sales, conception, reduction to practice, design and development, and the prosecution history of the patent
55 days:	Disclosure of preliminary invalidity contentions: • Invalidity claim chart • Production of specifications, source code, schematics, formulas, and flow charts sufficient to show operation of each accused instrumentality • Production of copies of the cited prior art
65 days:	Exchange of proposed terms and claim elements for construction
85 days:	Simultaneous exchange of preliminary claim constructions
115 days:	Joint claim construction and prehearing statement
145 days:	Completion of claim construction discovery
160 days:	Opening claim construction briefs Responsive briefs fourteen days later Reply by party asserting infringement seven days after responsive briefs

Blank pages inserted to preserve pagination when printing double-sided copies.

Chapter 8: Claim Construction—The *Markman* Hearing[109]

A. General Principles

The patent claims define the metes and bounds of the patentee's right to exclude others from practicing its invention. Because claim construction is necessary for both the infringement and invalidity analyses in patent infringement actions, it is a key task.

The court must construe the claims,[110] but it has substantial discretion in the process it undertakes to construe the claim terms at issue, including:

- when during the course of the lawsuit to construe the claim terms at issue;
- whether and how to conduct a tutorial on the underlying technology or to rely on expert testimony prior to construing the claims;
- whether to have a formal evidentiary hearing, often called a "*Markman* hearing" after the seminal Supreme Court case,[111] involving testimony from witnesses, and how much time to devote to each party at such a hearing; and
- the order in which it may consider evidence relevant to the construction of any particular claim.

B. Key Elements in Claim Construction

1. Claims

Claims are typically written in a form that has three sections: the "preamble," the "transition," and the "body."

The preamble sets out the type of invention being claimed, such as "A pharmaceutical product." It usually does not limit the scope of the claim, but it may limit the claim where the claim's patentability depends on a limitation recited only in the preamble, or where the body

---

109. John L. Cooper, FACTL, Farella Braun + Martel LLP, San Francisco, California.
110. Markman v. Westview Instruments, Inc., 517 U.S. 370 (1996).
111. *Id.*

of the claim refers to a term in the preamble. It may also shed light on the meaning of claim terms.

The transition is a phrase that links the preamble to the body, such as "comprising," "consisting of," or "consisting essentially of." These terms have special meaning in patent law. "Comprising" is open-ended, meaning that the invention can include additional elements, so long as it includes all of the elements listed in the claim. In contrast, "consisting of" is closed, prohibiting any elements other than those claimed. "Consisting essentially of" is a variant of the closed form, permitting only unclaimed elements "that do not materially affect the basic and novel properties of the invention."[112]

The body of the claim sets forth a series of phrases delineating the structural limitations, elements, or steps in the invention. Thus, the claim construction typically focuses on the limitations in the body of the claim.

a. Independent v. dependent claims

Independent claims stand alone, while dependent claims expressly refer to an earlier claim, such as "The method of claim 1, further comprising . . . ." A dependent claim incorporates all of the limitations of the claim from which it depends and adds further limitations specific to the dependent claim. Thus, it is necessarily narrower than the claim from which it depends. Independent claims are typically the most important because they have the broadest coverage.

b. Means-plus-function or step-plus-function claims

A patentee may use a shorthand technique to draft a claim limitation by invoking the written description of the patent, pursuant to 35 U.S.C. § 112, ¶ 6, which provides:

112. PPG Indus. v. Guardian Indus. Corp., 156 F.3d 1351, 1354 (Fed. Cir. 1998).

> An element in a claim for a combination may be expressed as a means or step for performing a specified function without the recital of structure, material, or acts in support thereof, and such claim shall be construed to cover the corresponding structure, material, or acts described in the specification and equivalents thereof.[113]

Known as "means-plus-function," "step-plus-function," or "112/6" claim limitations, these limitations frequently use the language "means for [performing a function]" or "step for [performing a function]," and § 112, paragraph 6 presumptively applies when these phrases are used.

Use of this technique limits the claim term to the specific structure disclosed in the written description and to equivalents of that structure. For example, a claim reciting "a fastener" may encompass nails, screws, clips, buttons, buckles, glue, Velcro, and other fasteners, while a claim reciting "a means for fastening" may be limited to nails and the equivalents of nails if the written description of the patent describes only nails.

2. *Intrinsic evidence*

Patents must include a "specification," which is the written body of the patent, other than the claims.

The "prosecution history" of a patent, which is also called the "file history" or "file wrapper," is the complete record of the examination proceedings before the Patent and Trademark Office, including the prior art cited during the examination. The prosecution history provides evidence of the Patent and Trademark Office's and the inventor's understanding of the patent, and it can be used to define or narrow the claimed invention.

C. Timing of Claim Construction

The timing of claim construction may significantly affect the course of patent litigation. An early claim construction may focus discovery, streamline the issues to be tried, and enhance settlement prospects, but construing the claims before discovery has been completed may result in constructions based on an incomplete record, or even construction

113. 35 U.S.C. § 112, ¶ 6 (2000).

of claim terms that have no bearing on the ultimate infringement issues to be resolved. Thus, many local patent rules set claim construction several months after the initial case-management conference. (*See supra* Chapter 7.E.) Nonetheless, the particular facts and technology involved in a particular case may affect the timing of claim construction.

D. Issues to Consider During a Claim Construction Hearing

The parties usually bear the responsibility of isolating terms and phrases for the court to construe, but certain courts limit the number of claim terms that they will construe during a claim construction hearing because patent cases typically turn on the construction of only a few key terms or phrases. Indeed, courts have noted that patent infringement cases usually "resolve by motion or settlement" soon after these terms or phrases are construed. Additional terms can be construed at the summary judgment or trial phases of the action, or a party may request leave to designate additional terms and demonstrate good cause for doing so.

E. Evidence to Consider When Construing Patent Claim Terms

The Federal Circuit laid out the basic principles of claim construction in *Phillips v. AWH Corp.*[114] The words of a claim are generally given their ordinary and customary meaning as understood by a person of ordinary skill in the field of the invention, called a "person of ordinary skill in the art," at the time of the invention. The evidence used to determine the ordinary and customary meaning is divided into "intrinsic evidence," which is the claims themselves, the specification, and the prosecution history; and "extrinsic evidence," which includes a range of different sources, such as expert testimony, dictionaries, and technical treatises. "The sequence of steps used by the judge in consulting various sources is not important; what matters is for the court to attach

114. 415 F.3d 1303 (Fed. Cir. 2005) (en banc).

the appropriate weight to be assigned to those sources in light of the statutes and policies that inform patent law."[115]

1. *Use of intrinsic evidence in construing claim terms*

The most important evidence to consider in interpreting patent claims is the language of the patent claims at issue. The usage of the claim term in the context of both the claim under construction and other claims in the patent can prove highly informative. For example, *Phillips* noted that the use of the term "steel baffles" implied that the term "baffles" was not limited to steel objects. Moreover, claim terms are generally used consistently and have the same meaning throughout the patent. Finally, differences between the claims, both asserted and unasserted, can help determine the meaning of a claim term.

The patent is treated as a fully integrated written instrument, which includes the specification and concludes with claims, and the specification "is always highly relevant to the claim construction analysis."[116] The specification may indicate how the patentee views the scope of the invention, although the court must remain wary not to import limitations from the specification into the claims. The specification must also be reviewed to determine whether the patentee acted as his or her own lexicographer, using a special definition for a term that may differ from the term's ordinary and customary meaning. The specification may also provide a clear disclaimer, or disavowal, of claim scope by the inventor, which is dispositive.

The claim construction should also consider the prosecution history of the patent, although the use of the prosecution history in claim construction may in some cases be secondary to the specification. The written dialogue between the Patent and Trademark Office and the patent applicant may include statements with which the applicant was attempting to explain the invention and the claim terms and to distinguish the invention and the claim terms from the prior art to obtain the patent. The prosecution history may therefore include helpful, if not controlling, statements.

---

115. *Id.* at 1324.
116. *Id.* at 1315.

2. *Use of extrinsic evidence in construing claim terms*

While the Federal Circuit has placed significant emphasis on the use of intrinsic evidence in construing patent claims, it has held that courts may also consider extrinsic evidence in construing claim terms. Extrinsic evidence is less significant than intrinsic evidence, though.

Technical dictionaries and treatises are a potentially helpful form of extrinsic evidence that can help the court understand the underlying technology and the way in which a person of ordinary skill in the art might use the claim terms. In addition, expert testimony can be used (1) to provide background on the technology at issue; (2) to explain how an invention works; (3) to help ensure that the court's understanding of the technology in the patent comports with that of a person of ordinary skill in the art (including testimony that will ground the court's analysis in the science as it was understood when the patent was filed); and (4) to help establish that a particular term in the patent or the prior art had a particular meaning in the pertinent field during the relevant time frame. However, conclusory, unsupported assertions by experts regarding the definition of a claim term, and assertions that are at odds with the claim construction based on the intrinsic record, should be rejected. Thus, courts regularly reject testimony from "patent experts" whose sole or primary function is to opine about how claims should be construed. Many courts view such testimony as an intrusion on the court's function.

The Federal Circuit has noted several reasons that extrinsic evidence may be less reliable than intrinsic evidence. For example, extrinsic evidence was not created for the purpose of explaining the patent or the meanings of terms in the patent. Extrinsic publications may not be written by or for those skilled in the art, so they may not reflect the meaning of a term to such a person. Moreover, expert reports and testimony may suffer from litigation bias. Finally, the universe of extrinsic evidence is very large, and each party will choose the most favorable extrinsic evidence to support its arguments. Accordingly, extrinsic evidence must always be considered in the context of the intrinsic record, which carries more weight in claim construction.

F. Appeal of a Claim Construction Ruling

The Federal Circuit reviews claim construction rulings without deference on appeal. Nevertheless, the Federal Circuit has generally been unwilling to hear interlocutory appeals of claim construction issues.

Blank pages inserted to preserve pagination when printing double-sided copies.

Chapter 9: Summary Judgment Motions[117]

A. Applying the Summary Judgment Standard to Burdens of Proof in Patent Litigation

Summary judgment is as appropriate in a patent case as it is in any other case.[118] Before discussing the specific burdens of proof in patent litigation, however, it is important to differentiate between a movant seeking summary judgment who does not ultimately bear the burden of proof at trial and one who does. "When the moving party does not have the burden of proof on the issue that is the subject of the summary judgment motion . . . the movant nonetheless bears the initial burden of coming forward with sufficient evidence to demonstrate that there is no material issue of fact that would preclude summary judgment, and that it is entitled to judgment as a matter of law."[119] The moving party may meet its initial burden by either providing evidence that negates an essential element of the opposing party's case or by showing that there is no material issue of fact and that the nonmoving party will be unable to prove an essential element of its case.[120] Once the movant satisfies its initial burden, then the burden of coming forward shifts to the party opposing the motion.[121] "The opposing party does not, at this stage, have the burden of establishing that it is entitled to judgment in its favor; it need only show either that the movant did not establish that it is entitled to judgment on undisputed facts or on the opposer's version of the facts, or that there are material issues of fact which require resolution at trial."[122]

---

117. Kenneth S. Weitzman, Weitzman Law Offices LLC, Roseland, New Jersey.

118. Desper Prods., Inc. v. QSound Labs, Inc., 157 F.3d 1325, 1332 (Fed. Cir. 1998) (quoting C.R. Bard, Inc. v. Advanced Cardiovascular, Inc., 911 F.2d 670, 672 (Fed. Cir. 1990)); *see also* Avia Group Int'l, Inc. v. L.A. Gear Cal., Inc., 853 F.2d 1557, 1561 (Fed. Cir. 1988); Spectra Corp. v. Lutz, 839 F.2d 1579, 1581 n.6 (Fed. Cir. 1988). Summary judgment may be particularly appropriate in patent cases where the only real dispute between the parties is that of claim construction—which is a question of law for the court to decide.

119. Vivid Techs., Inc. v. Am. Science & Eng'g, Inc., 200 F.3d 795, 806 (Fed. Cir. 1999).

120. *Id.* at 807.

121. *Id.* at 806.

122. *Id.* at 806–07.

In contrast, "where the moving party has the burden of proof on a claim or defense raised in a summary judgment motion, it must show that the undisputed facts establish every element of the claim or defense."[123] In other words, even in the absence of an adequate response by the nonmovant, a moving party who bears the ultimate burden of proof on the issue raised in the summary judgment motion must demonstrate that it is entitled to judgment as a matter of law.[124]

1. *Summary judgment of infringement/noninfringement*

Summary judgment on the issue of infringement or noninfringement is available in patent litigation.[125]

A claim for patent infringement must be proven by a preponderance of the evidence.[126] Patent infringement is a two-step inquiry. First, the court must construe the asserted patent claim(s) as a matter of law.[127] Second, the fact finder—here, the court for purposes of summary judgment—must determine whether the accused product, composition, system, or process contains each limitation of the properly construed claims, either literally or under the doctrine of equivalents.

---

123. Meyers v. Brooks Shoe Inc., 912 F.2d 1459, 1461 (Fed. Cir. 1990), *overruled on other grounds,* A.C. Aukerman Co. v. R.L. Chaides Const. Co., 960 F.2d 1020 (Fed. Cir. 1992); *see also* Meyers v. Asics Corp., 974 F.2d 1304, 1307 (Fed. Cir. 1992).

124. *See* Saab Cars USA, Inc. v. United States, 434 F.3d 1359, 1368 (Fed. Cir. 2006) (citation omitted).

125. *See, e.g.,* Flex-Rest, LLC v. Steelcase, Inc., 455 F.3d 1351 (Fed. Cir. 2006); Semitool, Inc. v. Dynamic Micro Sys. Semiconductor Equip. GmbH, 444 F.3d 1337, 1447 (Fed. Cir. 2006); Schoenhaus v. Genesco, Inc., 440 F.3d 1354, 1359–60 (Fed. Cir. 2006); Lawman Armor Corp. v. Winner Int'l, LLC, 437 F.3d 1383, 1384 (Fed. Cir. 2006); MicroStrategy Inc. v. Business Objects, S.A., 429 F.3d 1344, 1353 (Fed. Cir. 2005); Invitrogen Corp. v. Clontech Labs., Inc., 429 F.3d 1052, 1081 (Fed. Cir. 2005); Nystrom v. TREX Co., 424 F.3d 1136, 1138 (Fed. Cir. 2005); Biagro W. Sales, Inc. v. Grow More, Inc., 423 F.3d 1296, 1304–07 (Fed. Cir. 2005); Network Commerce, Inc. v. Microsoft Corp., 422 F.3d 1353, 1364 (Fed. Cir. 2005); Tap Pharm. Prods., Inc. v. Owl Pharms., L.L.C., 419 F.3d 1346, 1348–49 (Fed. Cir. 2005); Terlep v. Brinkmann Corp., 418 F.3d 1379, 1380 (Fed. Cir. 2005); Pause Tech., LLC v. TiVo, Inc., 419 F.3d 1326, 1336 (Fed. Cir. 2005); CollegeNet, Inc. v. ApplyYourself Inc., 418 F.3d 1225, 1236 (Fed. Cir. 2005); Lisle Corp. v. A.J. Mfg. Co., 398 F.3d 1306, 1317 (Fed. Cir. 2005); Frank's Casing Crew & Rental Tools, Inc. v. Weatherford Int'l, Inc., 389 F.3d 1370, 1379–80 (Fed. Cir. 2004). *See also supra* Chapter 2.A.

126. Advanced Cardiovascular Sys., Inc. v. Scimed Life Sys., Inc., 261 F.3d 1329, 1336 (Fed. Cir. 2001).

127. Markman v. Westview Instruments, Inc., 517 U.S. 370, 372–74 (1996); Cybor Corp. v. FAS Techs., Inc., 138 F.3d 1448, 1454 (Fed. Cir. 1998) (en banc).

The first step is a question of law; the second step is a question of fact.[128]

Summary judgment is particularly appropriate in patent cases where the only real dispute between the parties concerns the proper meaning of the patent claims.[129]

Because claim construction is a question of law for the court to decide, disputes over the proper meaning of claim terms do not alone raise genuine issues of material fact sufficient to preclude the grant of summary judgment.[130]

"Summary judgment on the issue of infringement [or noninfringement] is proper when no reasonable jury could find that every limitation recited in a properly construed claim either is or is not found in the accused device either literally or under the doctrine of equivalents."[131]

---

128. *Markman*, 517 U.S. at 372–74; Ferguson Beauregard v. Mega Sys., Inc., 350 F.3d 1327, 1338 (Fed. Cir. 2003).

129. *See* Voice Techs. Group, Inc. v. VMC Sys., Inc., 164 F.3d 605, 612 (Fed. Cir. 1999) ("Upon construction of the claims, summary judgment may follow when it is shown that the infringement issue can be reasonably decided only in favor of the movant, when all reasonable factual inferences are drawn in favor of the non-movant."); Vivid Techs., Inc. v. Am. Science & Eng'g, Inc., 200 F.3d 795, 806 (Fed. Cir. 1999).

130. *See* Laitram Corp. v. Morehouse Indus., Inc., 143 F.3d 1456, 1461 (Fed. Cir. 1998) ("Because the parties did not dispute the structure of the accused devices . . . once the issue of claim construction is settled, [the] summary judgment motion for noninfringement did not implicate any issues of fact."); General Mills, Inc. v. Hunt-Wesson, Inc., 103 F.3d 978, 983 (Fed. Cir. 1997); Athletic Alternatives, Inc. v. Prince Mfg., Inc., 73 F.3d 1573, 1578 (Fed. Cir. 1996) ("Where, as here, the parties do not dispute any relevant facts regarding the accused product but disagree over which of two possible meanings of Claim 1 is the proper one, the question of literal infringement collapses to one of claim construction and is thus amenable to summary judgment."); Southwall Techs., Inc. v. Cardinal IG Co., 54 F.3d 1570, 1578 (Fed. Cir. 1995) ("disagreement over the meaning of a term within a claim does not necessarily create a genuine issue of material fact"); Transmatic, Inc. v. Gulton Indus., Inc., 53 F.3d 1270, 1278 (Fed. Cir. 1995) ("The structure of the accused device was undisputed; the parties' disagreement over the meaning of the claim did not preclude a grant of summary judgment."); Intellicall, Inc. v. Phonometrics, Inc., 952 F.2d 1384, 1387 (Fed. Cir. 1992); Tillotson, Ltd. v. Walbro Corp., 831 F.2d 1033, 1037 (Fed. Cir. 1987) ("Claim scope or construction is a question of law and the existence of a dispute as to that legal issue does not preclude summary judgment."); Howes v. Medical Components, Inc., 814 F.2d 638, 643 (Fed. Cir. 1987) ("Claim construction is a question of law and the mere existence of a dispute as to that legal issue does not preclude summary judgment.").

131. PC Connector Solutions LLC v. SmartDisk Corp., 406 F.3d 1359, 1364 (Fed. Cir. 2005) (citing Bai v. L & L Wings, Inc., 160 F.3d 1350, 1353–54 (Fed. Cir. 1998)); *see also* Chimie v. PPG Indus., Inc., 402 F.3d 1371, 1376 (Fed. Cir. 2005); Frank's Casing Crew &

To be entitled to summary judgment of noninfringement, the moving party must demonstrate that the facts and inferences, when viewed in the light most favorable to the nonmoving party, would not persuade a reasonable jury to return a verdict in favor of the nonmoving party—the patent owner.[132]

2. *Summary judgment of validity/invalidity*

It is common for a defendant in a patent litigation to move for summary judgment that one or more claims of the asserted patent(s) are invalid. Similarly, although less common, a patentee may move for summary judgment that its patent claims are not invalid.[133]

Because a patent is presumed valid pursuant to 35 U.S.C. § 282, the party seeking to invalidate a patent claim has the burden to do so by clear and convincing evidence.[134]

Thus, in the context of summary judgment, a moving party seeking to invalidate a patent bears the burden of proof and "must submit such clear and convincing evidence of invalidity so that no reasonable jury

---

Rental Tools, Inc. v. Weatherford Int'l, Inc., 389 F.3d 1370, 1376 (Fed. Cir. 2004) (citing Gart v. Logitech, Inc., 254 F.3d 1334, 1339 (Fed. Cir. 2001)). In other words, "[s]ummary judgment is appropriate when it is apparent that only one conclusion as to infringement could be reached by a reasonable jury." TechSearch, L.L.C. v. Intel Corp., 286 F.3d 1360, 1369 (Fed. Cir. 2002) (citing ATD Corp. v. Lydall, Inc., 159 F.3d 534, 540 (Fed. Cir. 1998)).

132. Bus. Objects, S.A. v. Microstrategy, Inc., 393 F.3d 1366, 1371–72 (Fed. Cir. 2005) (citing Anderson v. Liberty Lobby, Inc., 477 U.S. 242, 255 (1986)).

133. *See, e.g.,* IPXL Holdings, L.L.C. v. Amazon.com, Inc., 430 F.3d 1377, 1378 (Fed. Cir. 2005) (affirming grant of summary judgment of invalidity); Sentry Protection Prods., Inc. v. Eagle Mfg. Co., 400 F.3d 910, 911 (Fed. Cir. 2005) (same); University of Rochester v. G.D. Searle & Co., Inc., 358 F.3d 916, 917 (Fed. Cir. 2004) (same); Minton v. Nat'l Ass'n of Sec. Dealers, Inc., 336 F.3d 1373, 1381 (Fed. Cir. 2003) (same); New Railhead Mfg., L.L.C. v. Vermeer Mfg. Co., 298 F.3d 1290, 1297 (Fed. Cir. 2002) (same); Teleflex, Inc. v. Ficosa N. Am. Corp., 299 F.3d 1313, 1329–30 (Fed. Cir. 2002) (affirming grant of partial summary judgment of no invalidity); Apotex USA, Inc. v. Merck & Co., 254 F.3d 1031, 1033 (Fed. Cir. 2001) (affirming grant of summary judgment of invalidity); Shockley v. Arcan, Inc., 248 F.3d 1349, 1353 (Fed. Cir. 2001) (affirming grant of summary judgment of no invalidity); Nat'l Presto Indus., Inc. v. West Bend Co., 76 F.3d 1185, 1189 (Fed. Cir. 1996) (same).

134. Invitrogen Corp. v. Biocrest Mfg., L.P., 424 F.3d 1374, 1378 (Fed. Cir. 2005); Norian Corp. v. Stryker Corp., 363 F.3d 1321, 1326 (Fed. Cir. 2004); Group One, Ltd. v. Hallmark Cards, Inc., 254 F.3d 1041, 1045–46 (Fed. Cir. 2001); Connell v. Sears Roebuck & Co., 722 F.2d 1542, 1549 (Fed. Cir. 1983). This standard of proof applies equally in the summary judgment context. *Nat'l Presto*, 76 F.3d at 1189.

could find otherwise."[135] In contrast, if the patentee moves for summary judgment that its patent claims are not invalid, the movant—who does not bear the burden of proof at trial—must show that the nonmoving party "failed to produce clear and convincing evidence on an essential element of a defense upon which a reasonable jury could invalidate the patent."[136]

Since a court considering summary judgment must view the evidence through the prism of the evidentiary burden the parties would have faced at trial,[137] it is important to recognize that the issue of invalidity may be a question of fact (such as in the case of anticipation, lack of written description, or best-mode violation), a question of law based on underlying facts (such as in the case of obviousness, inventorship, derivation, or lack of enablement), or a pure question of law (such as in the case of indefiniteness).

As with infringement, the first step in any invalidity analysis is determining the proper meaning of the relevant claim terms in dispute.[138] Because claim construction is a question of law, disputes with respect to the proper meaning of claim terms do not alone raise genuine issues of material fact sufficient to preclude the grant of summary judgment.[139]

Like claim construction, some invalidity defenses are questions of law that are amenable to summary judgment. For instance, because the determination of whether a claim is indefinite and thus invalid under 35 U.S.C. § 112, ¶ 2, is a question of law,[140] summary judgment of inva-

---

135. Eli Lilly & Co. v. Barr Labs., Inc., 251 F.3d 955, 962 (Fed. Cir. 2001).

136. *Id.*

137. Apple Computer, Inc. v. Articulate Sys., Inc., 234 F.3d 14, 20 (Fed. Cir. 2000).

138. *See* Akamai Techs., Inc. v. Cable & Wireless Internet Servs., Inc., 344 F.3d 1186, 1195 n.4 (Fed. Cir. 2003); Omega Eng'g, Inc. v. Raytek Corp., 334 F.3d 1314, 1335 (Fed. Cir. 2003); SIBIA Neurosciences, Inc. v. Cadus Pharm. Corp., 225 F.3d 1349, 1355 (Fed. Cir. 2000) ("[t]he first step in any invalidity analysis is claim construction").

139. *See* Southwall Techs., Inc. v. Cardinal IG Co., 54 F.3d 1570, 1578 (Fed. Cir. 1995) ("disagreement over the meaning of a term within a claim does not necessarily create a genuine issue of material fact"); Tillotson, Ltd. v. Walbro Corp., 831 F.2d 1033, 1037 (Fed. Cir. 1987) ("Claim scope or construction is a question of law and the existence of a dispute as to that legal issue does not preclude summary judgment."); Howes v. Med. Components, Inc., 814 F.2d 638, 643 (Fed. Cir. 1987) ("Claim construction is a question of law and the mere existence of a dispute as to that legal issue does not preclude summary judgment.").

140. Cross Med. Prods., Inc. v. Medtronic Sofamor Danek, Inc., 424 F.3d 1293, 1303 (Fed. Cir. 2005).

lidity for indefiniteness is appropriate where one or more patent claims are "not amenable to construction" or "insolubly ambiguous."[141] Summary judgment of invalidity for indefiniteness is not appropriate, however, where the "meaning of the claim is discernible, even though the task may be formidable and the conclusion may be one over which reasonable persons will disagree."[142]

Other invalidity defenses are questions of law based on underlying factual issues. For example, while the ultimate determination of invalidity based on obviousness under 35 U.S.C. § 103 is a legal issue for the court, it is based on subsidiary factual issues, such as the scope and content of the prior art, differences between the prior art and the claim(s) being challenged, the level of ordinary skill in the art, and so-called "secondary considerations" of nonobviousness.[143] Where the underlying factual issues are not in dispute, summary judgment may be appropriate even if the ultimate legal conclusion of obviousness is disputed.[144]

However, a patentee cannot defeat summary judgment of obviousness simply by pointing to disputes on these underlying factual inquiries.[145] In such circumstances, the court must weigh "'the materiality of the dispute, i.e., whether resolution of the dispute one way or the other makes a difference to the final determination of obviousness.'"[146] So long as the court views all the factual disputes in the light most favorable to the nonmoving party, the court can grant summary judgment of invalidity based on obviousness if it finds that resolution of those factual disputes does not affect the outcome.[147] If, however, the ultimate

141. Datamize, LLC v. Plumtree Software, Inc., 417 F.3d 1342, 1347 (Fed. Cir. 2005).

142. Bancorp Servs., L.L.C. v. Hartford Life Ins. Co., 359 F.3d 1367, 1371 (Fed. Cir. 2004); *see also* Xerox Corp. v. 3Com Corp., 458 F.3d 1310 (Fed. Cir. 2006).

143. *See* Graham v. John Deere Co., 383 U.S. 1, 17–18 (1966); Group One Ltd. v. Hallmark Cards, Inc., 407 F.3d 1297, 1303 (Fed. Cir. 2005).

144. Newell Cos. v. Kenney Mfg. Co., 864 F.2d 757, 763 (Fed. Cir. 1988).

145. *See* Chore-Time Equip., Inc. v. Cumberland Corp., 713 F.2d 774, 778 (Fed. Cir. 1983) ("The mere incantation of the fact findings listed in *Graham* cannot establish the impropriety of issuing a summary judgment when there is no material issue of fact requiring a trial to resolve, and the facts of record require a holding of patent invalidity.").

146. Rockwell Int'l Corp. v. United States, 147 F.3d 1358, 1362 (Fed. Cir. 1998) (quoting Monarch Knitting Mach. Corp. v. Sulzer Morat GmbH, 139 F.3d 877, 881 (Fed. Cir. 1998)).

147. *See* Union Carbide Corp. v. Am. Can Co., 724 F.2d 1567, 1571 (Fed. Cir. 1984).

determination of obviousness depends on resolution of those factual disputes, then summary judgment is not appropriate.

Like obviousness, the issue of invalidity from lack of enablement under 35 U.S.C. § 112, ¶ 1, is a question of law based on underlying factual issues.[148] In this context, "[w]hether undue experimentation is needed is not a single, simple factual determination, but rather is a conclusion reached by weighing many factual considerations," such as: "(1) the quantity of experimentation necessary, (2) the amount of direction or guidance presented, (3) the presence or absence of working examples, (4) the nature of the invention, (5) the state of the prior art, (6) the relative skill of those in the art, (7) the predictability or unpredictability of the art, and (8) the breadth of the claims."[149] If there are no genuine issues of material fact, then the court may grant summary judgment on the enablement issue.[150] However, if the ultimate determination of invalidity depends on resolution of these factual disputes, then summary judgment is not appropriate.

Likewise, invalidity because of improper inventorship or derivation under 35 U.S.C. § 102(f) is a question of law based on underlying factual issues.[151] If there are no genuine issues of material fact, then the court may grant summary judgment on this issue. If, however, the ultimate determination of invalidity depends on resolution of factual disputes, then summary judgment is not appropriate.

Other invalidity defenses raised in patent litigation are questions of fact. For instance, anticipation based on the prior art under 35 U.S.C. § 102 is a question of fact.[152] Nevertheless, "[a]lthough anticipation is a question of fact, it still may be decided on summary judgment if the record reveals no genuine dispute of material fact."[153] "Summary judgment is proper if no reasonable jury could find that the patent is not anticipated."[154]

---

148. *See* Liquid Dynamics Corp. v. Vaughan Co., 449 F.3d 1209, 1224 (Fed. Cir. 2006).

149. *In re* Wands, 858 F.2d 731, 737 (Fed. Cir. 1988).

150. *See* Nat'l Recovery Techs., Inc. v. Magnetic Separation Sys., Inc., 166 F.3d 1190, 1194 (Fed. Cir. 1999).

151. Checkpoint Sys., Inc. v. All-Tag Sec. S.A., 412 F.3d 1331, 1338 (Fed. Cir. 2005) (citing Bd. of Educ. v. Am. Bioscience, 333 F.3d 1330, 1337 (Fed. Cir. 2003)).

152. IPXL Holdings, L.L.C. v. Amazon.com, Inc., 430 F.3d 1377, 1380 (Fed. Cir. 2005).

153. Telemac Cellular Corp. v. Topp Telecom, Inc., 247 F.3d 1316, 1327 (Fed. Cir. 2001) (citing Gen. Elec. Co. v. Nintendo Co., Ltd., 179 F.3d 1350, 1353 (Fed. Cir. 1999)).

154. *Telemac*, 247 F.3d at 1327.

Like anticipation, invalidity for lack of written description under 35 U.S.C. § 112, ¶ 1, is a question of fact, judged from the perspective of one of ordinary skill in the art as of the relevant filing date.[155] Where a patentee moves for summary judgment that its patent claims are not invalid for failure to satisfy the written description requirement, the nonmoving party—who bears the burden of proof on the invalidity issue—must come forward with evidence raising at least a genuine issue of fact regarding whether the patents failed the written description requirement.[156]

Similarly, invalidity for failure to comply with the best-mode requirement under 35 U.S.C. § 112, ¶ 1, is a question of fact that involves a two-pronged inquiry.[157] The first prong is subjective, focusing on the inventor's state of mind at the time of filing the patent application, and asks whether the inventor considered a particular mode of practicing the invention to be superior to all other modes at the time of filing.[158] The second prong is objective and asks whether the inventor adequately disclosed the mode he or she considered to be superior.[159] If there are no genuine issues of material fact, then the court may grant summary judgment on the issue of failure to satisfy the best-mode requirement. On the other hand, if the ultimate determination of invalidity depends on resolution of factual disputes, then summary judgment on the best-mode issue is not appropriate.

3. *Summary judgment of unenforceability*

Although less common than summary judgment of invalidity or noninfringement, courts have granted summary judgment that a patent is unenforceable because of inequitable conduct committed during the prosecution of the patent application(s) leading to the patent-in-suit.[160]

---

155. *See* Vas-Cath, Inc. v. Mahurkar, 935 F.2d 1555, 1563–64 (Fed. Cir. 1991).

156. *See* Invitrogen Corp. v. Clontech Labs., Inc., 429 F.3d 1052, 1072–73 (Fed. Cir. 2005) (citing Novartis Corp. v. Ben Venue Labs., Inc., 271 F.3d 1043, 1046 (Fed. Cir. 2001)).

157. N. Telecom Ltd. v. Samsung Elecs. Co., 215 F.3d 1281, 1286 (Fed. Cir. 2000).

158. *Id.*

159. *See* Amgen, Inc. v. Chugai Pharm. Co., 927 F.2d 1200, 1212 (Fed. Cir. 1991).

160. *See* Digital Control Inc. v. Charles Mach. Works, 437 F.3d 1309, 1313 (Fed. Cir. 2006) ("Determining at summary judgment that a patent is unenforceable for inequitable conduct is permissible, but uncommon."); Ferring B.V. v. Barr Labs., Inc., 437 F.3d 1181, 1186–87 (Fed. Cir. 2006).

The Federal Circuit has "'urge[d] caution' in making an inequitable conduct determination at the summary judgment stage."[161] This is particularly so because the requisite intent to deceive the U.S. Patent and Trademark Office (PTO) is inherently factual and "can not be inferred solely from the fact that information was not disclosed; there must be a factual basis for a finding of deceptive intent.'"[162] However, courts regularly grant summary judgment where no evidence of intent to mislead is shown and it is inappropriate to infer such intent.

A patent may be rendered unenforceable because of inequitable conduct if a patent applicant, with intent to mislead or deceive the examiner in the PTO, fails to disclose material information or submits materially false information to the PTO during prosecution of the patent application.[163] The party asserting inequitable conduct must prove a threshold level of materiality and intent by clear and convincing evidence.[164] The court must then determine whether the patent applicant's conduct amounts to inequitable conduct by balancing the levels of materiality and intent, "with a greater showing of one factor allowing a lesser showing of the other."[165]

Thus, "[t]he material facts upon which a holding of inequitable conduct rests relate to both the intent of the actor and the materiality of the information."[166] Intent and materiality must be considered in light of each other.[167] "If the facts of materiality or intent are reasonably disputed, the issue is not amenable to summary disposition."[168]

In the context of summary judgment, a genuine issue of material fact is not raised by the submission of "merely conclusory statements or completely insupportable, specious, or conflicting explanations or

---

161. M. Eagles Tool Warehouse, Inc. v. Fisher Tooling Co., 439 F.3d 1335, 1340 (Fed. Cir. 2006) (quoting Paragon Podiatry Lab., Inc. v. KLM Labs., Inc., 984 F.2d 1182, 1190 (Fed. Cir. 1993)).

162. *M. Eagles*, 439 F.3d at 1340 (quoting Hebert v. Lisle Corp., 99 F.3d 1109, 1116 (Fed. Cir. 1996)).

163. Norian Corp. v. Stryker Corp., 363 F.3d 1321, 1330–31 (Fed. Cir. 2004).

164. Molins PLC v. Textron, Inc., 48 F.3d 1172, 1178 (Fed. Cir. 1995).

165. Union Pac. Res. Co. v. Chesapeake Energy Corp., 236 F.3d 684, 693 (Fed. Cir. 2001).

166. Baker Oil Tools, Inc. v. Geo Vann, Inc., 828 F.2d 1558, 1559 (Fed. Cir. 1987).

167. Am. Hoist & Derrick Co. v. Sowa & Sons, Inc., 725 F.2d 1350, 1363 (Fed. Cir. 1984).

168. *Baker Oil*, 828 F.2d at 1566 (citing KangaROOS U.S.A., Inc. v. Caldor, Inc., 778 F.2d 1571, 1577 (Fed. Cir. 1985)); *see also Ferring*, 437 F.3d at 1199.

excuses."[169] Thus, the Federal Circuit has affirmed grants of summary judgment on inequitable conduct where, for example, "the affidavits submitted to explain the representations made to the PTO were 'bare declaration[s] of lack of intent to mislead' and the explanations provided in the affidavits were either 'nonresponsive' or lacked evidentiary support."[170]

B. Timing of Summary Judgment Motions

The court has wide discretion in determining when summary judgment motions should be heard.[171] Assuming that the summary judgment motion raises issues relating to the interpretation of the asserted patent claims, the court has the discretion to: (1) construe the relevant disputed claim terms at the time of summary judgment without conducting a separate *Markman* hearing; (2) schedule a *Markman* hearing prior to hearing the summary judgment motion; or (3) combine the summary judgment hearing with a *Markman* hearing. Considerations related to these procedures are discussed below.

1. Where not all claims have been construed

It is proper for a court to hear a summary judgment motion prior to construing all of the disputed claim terms. There is no requirement that the court conduct a *Markman* hearing and construe claims prior to hearing summary judgment motions.

---

169. Monsanto Co. v. Homan McFarling, 363 F.3d 1336, 1340 (Fed. Cir. 2004) (quoting *Paragon*, 984 F.2d at 1191–92).

170. *Id.* (quoting *Paragon*, 984 F.2d at 1191–92). As the Federal Circuit noted in *Ferring*:

> [W]e have recognized, in cases such as *Paragon*, that summary judgment is appropriate on the issue of intent if there has been a failure to supply highly material information and if the summary judgment record establishes that (1) the applicant knew of the information; (2) the applicant knew or should have known of the materiality of the information; and (3) the applicant has not provided a credible explanation for the withholding.

Ferring, 437 F.3d at 1191 (citations omitted).

171. *See* CytoLogix Corp. v. Ventana Med. Sys., Inc., 424 F.3d 1168, 1172 (Fed. Cir. 2005) ("the district court has considerable latitude in determining when to resolve issues of claim construction"); Lab. Corp. of Am. Holdings v. Chiron Corp., 384 F.3d 1326, 1333 (Fed. Cir. 2004) ("District courts are granted broad latitude in managing the cases before them."); Nutrinova Nutrition Specialties & Food Ingredients GmbH v. Int'l Trade Comm'n, 224 F.3d 1356, 1360 (Fed. Cir. 2000).

The court has discretion to construe claims, if needed, in the context of a summary judgment motion.[172] The court need only construe the disputed claim language "to the extent necessary to resolve the controversy."[173]

2. *After all claims have been construed through a formal Markman hearing*

The court has wide discretion in determining whether to and when to hold a *Markman* hearing. In exercising this discretion, the court may defer summary judgment motions until after the court has construed the disputed terms in the patent claims.[174] Indeed, at least one district

---

172. *See* Markman v. Westview Instruments, Inc., 52 F.3d 967, 981 (Fed. Cir. 1995) (en banc), *aff'd*, 517 U.S. 370 (1996).

173. Vivid Techs., Inc. v. Am. Science & Eng'g, Inc., 200 F.3d 795, 803 (Fed. Cir. 1999); *see also* Ballard Med. Prods. v. Allegiance Healthcare Corp., 268 F.3d 1352, 1358 (Fed. Cir. 2001) ("If the district court considers one issue to be dispositive, the court may cut to the heart of the matter and need not exhaustively discuss all other issues presented by the parties."); Biovail Corp. Int'l v. Andrx Pharms., Inc., 239 F.3d 1297, 1301 (Fed. Cir. 2001) (finding it unnecessary to construe claim term that was not relevant to outcome of the case). *In re* Gabapentin Patent Litig., 395 F. Supp. 2d 153, 158 n.3 (D.N.J. 2005) (deciding summary judgment motion without *Markman* hearing); Aspex Eyewear, Inc. v. E'lite Optik, Inc., No. 3:98-CV-2996D, 2001 WL 204775, at *2 (N.D. Tex. Feb. 27, 2001) ("In cases such as this one, where the technology is accessible to the court and the claims are relatively straightforward, a *Markman* hearing is unnecessary.").

174. *See* Genzyme Corp. v. Transkaryotic Therapies, Inc., 346 F.3d 1094, 1096–97 (Fed. Cir. 2003) (summary judgment affirmed where motions were filed after *Markman* hearing); *In re* Cruciferous Sprout Litig., 301 F.3d 1343, 1346 (Fed. Cir. 2002) (affirming summary judgment granted after *Markman* hearing); Wolf Designs, Inc. v. DHR & Co., 231 F.R.D. 430, 440 (N.D. Ga. 2005) ("Typically, in a case involving a utility patent, claim construction would occur before summary judgment motions were filed."); Digi Int'l Inc. v. Lantronix, Inc., 2005 WL 1397010, at *3 (D. Minn. June 13, 2005); McNulty v. Taser Int'l, 217 F. Supp. 2d 1058 (C.D. Cal. 2002) (summary judgment granted after *Markman* hearing), *aff'd*, 106 Fed. Appx. 15 (Fed. Cir. 2004); Control Res., Inc. v. Delta Elecs., Inc., 133 F. Supp. 2d 121, 126 (D. Mass. 2001) ("[A]s is the practice of this Court, a *Markman* hearing was conducted prior to and entirely independently of the summary judgment hearing."); Amgen, Inc. v. Hoechst Marion Roussel, Inc., 126 F. Supp. 2d 69, 80 (D. Mass. 2001) ("when the *Markman* hearing is conducted at the summary judgment stage, it is also important to conduct the two hearings independently of each other—the *Markman* hearing being held prior to and entirely independently of the summary judgment hearing"), *aff'd in part, vacated & remanded*, 314 F.3d 1313 (Fed. Cir. 2003).

court has expressed the view that summary judgment briefing should follow the *Markman* hearing.[175]

3. *Combining Markman and summary judgment*

If a summary judgment motion raises issues relating to the interpretation of the asserted patent claims, the court has discretion to combine the summary judgment motion with a *Markman* hearing.[176] Conducting a *Markman* hearing in connection with summary judgment motions has the advantage of placing the dispute in proper context and can limit the number of disputed claim terms that the court must resolve in order to decide summary judgment.

C. Evidence to Support or Oppose Summary Judgment

1. *Expert evidence supporting summary judgment*

"Where the nonmoving party will bear the burden of proof at trial on a dispositive issue, a summary judgment motion may properly be made in reliance solely on the pleadings, depositions, answers to interrogatories, and admissions on file."[177] Thus, for example, in the context of summary judgment of noninfringement, the Federal Circuit has held

---

175. Magarl, L.L.C. v. Crane Co., No. IP 02-0478-C-T/L, 1:03-CV-01255-JDT-TW, 2004 WL 2750252, at *15 (S.D. Ind. Sept. 29, 2004).

176. *See* V-Formation, Inc. v. Benetton Group SpA, 401 F.3d 1307, 1310 (Fed. Cir. 2005) (affirming grant of summary judgment where district court heard summary judgment argument at same time as *Markman* hearing); Holmes Group, Inc. v. RPS Prods., Inc., 424 F. Supp. 2d 271, 282 (D. Mass. 2006) ("it is appropriate to address claim[] construction in the context of a motion for summary judgment"); Old Town Canoe Co. v. Glenwa, Inc., 229 F. Supp. 2d 1151, 1155 (D. Or. 2002) ("A summary judgment motion may create the appropriate setting in which to conduct a *Markman* hearing."), *rev'd in part*, 55 Fed. Appx. 918 (Fed. Cir. 2003); *Amgen*, 126 F. Supp. at 78 n.4 (timing of *Markman* hearing was "optimal" because "[a] motion for summary judgment is, of course, an excellent vehicle to frame the essential questions of patent claim construction"); Biogen v. Berlex Labs., Inc., 113 F. Supp. 2d 77, 81 (D. Mass. 2000) ("the court held a '*Markman* hearing,' for the purpose of deciding how to construe the relevant claims, in connection with the hearings on the motions for summary judgment"), *aff'd in part*, 318 F.3d 1132 (Fed. Cir. 2003); Ahlstrom Mach., Inc. v. Clement, 13 F. Supp. 2d 45, 46 (D.D.C. 1998) (holding oral argument on summary judgment and *Markman* hearing together), *aff'd*, 217 F.3d 860 (Fed. Cir. 1999) (table); MediaCom Corp. v. Rates Tech., Inc., 4 F. Supp. 2d 17, 22 & n.2 (D. Mass. 1998) ("[s]ince *Markman*, claim construction has most frequently been handled in conjunction with a hearing on a motion for summary judgment"; "the Rule 56 summary judgment motion is a perfectly appropriate vehicle in which to conduct a *Markman* hearing").

177. Celotex Corp. v. Catrett, 477 U.S. 317, 324 (1986).

"that nothing more is required than the filing of a summary judgment motion stating that the patentee had no evidence of infringement and pointing to the specific ways in which accused systems did not meet the claim limitations."[178]

Most often, however, moving parties support motions for summary judgment by submitting affidavits from fact and expert witnesses. Expert evidence, however, is not always necessary to support summary judgment motions in patent cases where the technology is "'easily understandable without the need for expert explanatory testimony.'"[179]

Expert testimony may be important in patent cases involving complex technology. Under Federal Rule of Civil Procedure 56(e), such supporting affidavits must be made on personal knowledge, show that the affiant is competent to testify, and set forth facts that would be admissible at trial. General and conclusory opinions of experts will not be sufficient to support summary judgment.[180]

2. *Expert evidence opposing summary judgment*

It is common for the nonmovant to oppose summary judgment based on an affidavit of its retained expert.[181] Under Rule 56(e), and like supporting affidavits, any such opposing affidavits must be made on personal knowledge, show that the affiant is competent to testify, and set forth facts that would be admissible at trial.

It is not always necessary for the nonmovant to oppose the motion with affidavits or other evidence. "[A] non-movant need not always provide affidavits or other evidence to defeat a summary judgment mo-

---

178. Exigent Tech., Inc. v. Atrana Solutions, Inc., 442 F.3d 1301, 1308 (Fed. Cir. 2006).

179. Centricut, LLC v. Esab Group, Inc., 390 F.3d 1361, 1369 (Fed. Cir. 2004), *cert. denied*, 126 S. Ct. 337, 163 L. Ed. 2d 49 (2005) (quoting Union Carbide Corp. v. Am. Can Co., 724 F.2d 1567, 1573 (Fed. Cir. 1984)); *see also* Prima Tekil, L.L.C. v. Polypap, S.A.R.L., 412 F.3d 1284, 1290 n.7 (Fed. Cir. 2005) ("Expert testimony was not required, the technology being easily understood without expert testimony."); Iron Grip Barbell Co., Inc. v. USA Sports, Inc., 392 F.3d 1317, 1323 n.3 (Fed. Cir. 2004).

180. *See* Koito Mfg. Co., Ltd. v. Turn-Key-Tech, LLC, 381 F.3d 1142, 1152 & n.4 (Fed. Cir. 2004) (expert's failure to provide explanatory testimony linking prior art to the asserted claims insufficient to find claims invalid over prior art); Phillips Petroleum Co. v. Huntsman Polymers Corp., 157 F.3d 866, 876 (Fed. Cir. 1998) (conclusory expert declarations devoid of facts upon which the conclusions were reached fail to raise a genuine issue of material fact that would preclude summary judgment).

181. *See* Schwing GmbH v. Putzmeister Aktiengesellschaft, 305 F.3d 1318, 1326 (Fed. Cir. 2002) (acknowledging that expert declarations are often offered to avoid summary judgment).

tion. If, for example, the movant bears the burden of proof and its motion fails to satisfy that burden, the non-movant is 'not required to come forward' with opposing evidence."[182]

Conclusory statements of counsel or of a witness on the ultimate issue do not raise a genuine issue of material fact.[183] "It is well settled that an expert's unsupported conclusion on the ultimate issue of infringement is insufficient to raise a genuine issue of material fact, and that a party may not avoid that rule simply by framing the expert's conclusion as an assertion that a particular critical claim limitation is found in the accused device."[184] "The party opposing the [summary judgment] motion must point to an evidentiary conflict created on the record at least by a counter statement of a fact or facts set forth in detail in an affidavit by a knowledgeable affiant. Mere denials or conclusory statements are insufficient."[185]

"It is not the trial judge's burden to search through lengthy technologic documents for possible evidence. The public interest in invalidating invalid patents does not override the well established procedure requiring the nonmovant to come forward with evidence sufficient to negate the movant's position."[186] Although expert testimony is not always required to prove infringement when the technology is complex, a patentee will be unable to satisfy its burden of proof if it fails to pre-

182. Saab Cars USA, Inc. v. United States, 434 F.3d 1359, 1368 (Fed. Cir. 2006) (citing Adickes v. S.H. Kress & Co., 398 U.S. 144, 160 (1970)); *see also Exigent Tech.*, 442 F.3d at 1307–08. "'If the motion is brought by a party with the ultimate burden of proof, the movant must still satisfy its burden by showing that it is entitled to judgment as a matter of law even in the absence of an adequate response by the nonmovant.'" *Saab*, 434 F.3d at 1368 (citing 11 James Wm. Moore et al., Moore's Federal Practice ¶ 56.13[1] (3d ed. 2005)).

183. *See Schwing*, 305 F.3d at 1326 ("[expert's] conclusory statement is insufficient to raise a genuine evidentiary dispute for trial"); Biotec Biologische Naturverpackungen GmbH & Co. KG v. Biocorp, Inc., 249 F.3d 1341, 1353 (Fed. Cir. 2001); Applied Cos. v. United States, 144 F.3d 1470, 1475 (Fed. Cir. 1998).

184. Dynacore Holdings Corp. v. U.S. Philips Corp., 363 F.3d 1263, 1277–78 (Fed. Cir. 2004) (citing Arthur A. Collins, Inc. v. N. Telecom Ltd., 216 F.3d 1042, 1046 (Fed. Cir. 2000); Zelinski v. Brunswick Corp., 185 F.3d 1311, 1317 (Fed. Cir. 1999); *Phillips Petroleum*, 157 F.3d at 876)).

185. Barmag Barmer Maschinenfabrik AG v. Murata Machinery, Ltd., 731 F.2d 831, 836 (Fed. Cir. 1984).

186. *Biotec Biologische*, 249 F.3d at 1353.

sent expert testimony in response to that offered by an accused infringer to negate infringement.[187]

D. Appealability of Partial Summary Judgment

Orders granting summary judgment disposing of the entire case generally can be appealed as a final judgment. Orders granting partial summary judgment are not final judgments.[188]

If a party wishes to immediately appeal an order granting partial summary judgment, it must ordinarily obtain certification from the district court under Rule 54(b).[189] If an order granting partial summary judgment is appealed prior to obtaining Rule 54(b) certification, the notice of appeal will ripen upon the entry of a proper Rule 54(b) certification.[190] Once there is a final judgment disposing of all claims in the case, an order granting partial summary judgment is considered to "merge" with the final judgment and becomes ripe for appeal.[191]

---

187. Centricut, LLC v. Esab Group, Inc., 390 F.3d 1361, 1370 (Fed. Cir. 2004).

188. CAE Screenplates Inc. v. Heinrich Fiedler GmbH & Co., 224 F.3d 1308, 1314 (Fed. Cir. 2000) ("An order granting partial summary judgment is not a final appealable order because . . . it does not dispose of all claims raised."); Syntex Pharms. Int'l, Ltd. v. K-Line Pharms., Ltd., 905 F.2d 1525, 1526 (Fed. Cir. 1990).

189. *CAE Screenplates*, 224 F.3d at 1313.

190. State Contracting & Eng'g Corp. v. Florida, 258 F.3d 1329, 1335 (Fed. Cir. 2001).

191. *See* Invitrogen Corp. v. Clontech Labs., Inc., 429 F.3d 1052, 1069 (Fed. Cir. 2005) (citing Hendler v. United States, 952 F.2d 1364, 1368 (Fed. Cir. 1991)); Fifth Third Bank of W. Ohio v. United States, 402 F.3d 1221, 1236 (Fed. Cir. 2005); Glaros v. H.H. Robertson Co., 797 F.2d 1564, 1573 (Fed. Cir. 1986) (stating that grant of partial summary judgment "from which no immediate appeal lies" is "merged" into the final judgment and reviewable on appeal from that judgment).

Blank pages inserted to preserve pagination when printing double-sided copies.

Chapter 10: Pretrial Issues and Motions In Limine[192]

Patent litigation raises unique pretrial issues regarding bifurcation (or other separation of issues for trial), time for trial, and motions in limine.

A. Separation of Issues for Trial

Patent trials are sometimes bifurcated (or trifurcated) among several different issues. For example, the issue of inequitable conduct is often bifurcated from the jury trial for a separate bench trial.[193] Courts have allowed other divisions of issues in appropriate situations.

Under Federal Rule of Civil Procedure 42(b), the court has discretion to order a separate trial of any claim or issue, or of any number of claims or issues, always preserving inviolate the right of trial by jury under the Seventh Amendment or pursuant to a statute. Considerations include convenience, avoiding prejudice, expedition, and economy.[194] Specific factors considered vary by the jurisdiction, but commonly considered factors include: (1) whether the issues are to be tried before a jury or to the court; (2) whether the issues have common questions of law or fact; (3) whether settlement of the claims or judicial economy would be facilitated; (4) whether prejudice would be avoided; (5) whether the posture of discovery on the issues favors a single trial or bifurcation; (6) whether a single trial of all issues would create the potential for jury bias or confusion; and (7) whether the documentary and testimonial evidence on the issues overlap.[195]

---

192. Morgan Chu, Christine W.S. Byrd & Alexander C.D. Giza, Irell & Manella LLP, Los Angeles, California.

193. *See, e.g.*, Micro Motion, Inc. v. Kane Steel Co., 894 F.2d 1318, 1320 (Fed. Cir. 1990) (noting that district court trifurcated case: inequitable conduct (tried to the court), infringement, and damages).

194. Fed. R. Civ. P. 42(b).

195. *See, e.g.*, Morris v. Northrop Grumman Corp., 37 F. Supp. 2d 556, 580 (E.D.N.Y. 1999); THK Am., Inc. v. NSK Co., 151 F.R.D. 625, 632 (N.D. Ill. 1993); Reading Indus. v. Kennecott Copper Corp., 61 F.R.D. 662, 664 (S.D.N.Y. 1974).

1. *Inequitable conduct from case in chief*

The Federal Circuit has specifically approved of bifurcating the issue of inequitable conduct from the remainder of a patent case and trying the inequitable conduct issue to the court without a jury.[196] In resolving the issue of the right to a jury trial,[197] the court concluded: "Thus the *conduct-of-the-applicant-in-the-PTO* issue raised in the nonjury trial and the separated infringement/validity issues are distinct and without commonality either as claims or in relation to the underlying fact issues."[198] Of course, the court has discretion to allow bifurcation, and the analysis could be more complicated if other Rule 42(b) factors are involved, e.g., if there are antitrust issues (*Handgards, Walker Process*) with common questions of fact for the jury.

Having a separate bench trial on inequitable conduct also extends, when otherwise appropriate, to bifurcation of other issues reserved for the court, e.g., laches, equitable estoppel, and unclean hands. Nevertheless, courts may, and often do, choose to use advisory juries for issues otherwise left to the courts.

2. *Willfulness from liability*

Courts have sometimes bifurcated the issue of willfulness from the issue of infringement.[199] Willful infringement is a question of fact[200] appropriate for decision by a jury.[201] This type of bifurcation separates the trial into two stages—first infringement, then willfulness—and the two stages are tried before the same jury, before two different juries, or to the court.

In the past, the main factor in favor of bifurcation of willfulness was prejudice to the accused infringer based on the *Quantum* di-

---

196. Agfa Corp. v. Creo Prods. Inc., 451 F.3d 1366, 1371–75 (Fed. Cir. 2006); Gardco Mfg., Inc. v. Herst Lighting Co., 820 F.2d 1209, 1212–13 (Fed. Cir. 1987).

197. *See, e.g.*, Beacon Theatres, Inc. v. Westover, 359 U.S. 500, 503–04 (1959).

198. *Gardco*, 820 F.2d at 1213 (emphasis in original).

199. *See, e.g.*, Kimberly A. Moore, *Empirical Statistics on Willful Patent Infringement*, 14 Fed. Cir. B.J. 227, 235 (2004) (reporting that from 1999–2000 willfulness was bifurcated in 34.5% of the cases that went to trial).

200. *See, e.g.*, Golden Blount, Inc. v. Robert H. Peterson Co., 438 F.3d 1354, 1367 (Fed. Cir. 2006).

201. Pending patent legislation seeks to make willfulness an issue entirely for the court. H.R. 5096, 109th Cong. 2d Sess. § 6 (2006) ("The court's determination of an infringer's willfulness shall be made without a jury.").

lemma—the problem of choosing between relying on advice of counsel as a willfulness defense and maintaining attorney–client privilege to prevent disclosure of materials on infringement that are potentially prejudicial.[202] The Federal Circuit has "suggested the advisability of separate trials in appropriate cases."[203]

In some cases, courts have found "no significant overlap between issues of liability for patent infringement and willfulness," and, having already decided to bifurcate damages into a second stage of trial, also include willfulness in the second stage.[204]

3. *Liability from damages*

Bifurcation of liability issues from damages issues might be appropriate in some patent cases.[205] "Patent cases are often uniquely amenable to bifurcation because of the complex nature of the damages determination and the extensive discovery that is often necessary to prove the nature and extent of those damages."[206] "A preliminary finding on the question of liability may well make unnecessary the damages inquiry, and thus result in substantial saving of time of the Court and counsel

---

202. Quantum Corp. v. Tandon Corp., 940 F.2d 642, 643–44 (Fed. Cir. 1991).

203. *Id.* at 644. *See also, e.g.*, Johns Hopkins Univ. v. Cellpro, 160 F.R.D. 30, 37 (D. Del. 1995) (discussing motion to bifurcate discovery and trial on damages and willfulness, ultimately denying motion but granting leave to renew at pretrial conference); Neorx Corp. v. Immunomedics, Inc., 28 U.S.P.Q.2d 1395, 1396–97 & n.4 (D.N.J. 1993) (vacating magistrate court's denial of bifurcation and remanding for in camera review of privileged materials and consideration of other factors). This may change in light of *Knorr-Bremse*, where the Federal Circuit held that "an adverse inference that a legal opinion was or would have been unfavorable shall not be drawn from invocation of the attorney–client and/or work product privileges or from failure to consult with counsel." Knorr-Bremse Systeme fuer Nutzfahrzeuge GmbH v. Dana Corp., 383 F.3d 1337, 1347 (Fed. Cir. 2004) (en banc). Moreover, *In re Seagate Tech. LLC*, No. Misc. 830, 2007 WL 2358677 (Fed. Cir. 2007), may have reduced the need to obtain and rely on opinions of counsel.

204. Novopharm Ltd. v. Torpharm, Inc., 181 F.R.D. 308, 312 (E.D.N.C. 1998); Princeton Biochemicals Inc. v. Beckman Instruments Inc., 180 F.R.D. 254, 260 (D.N.J. 1997).

205. *E.g.*, WMS Gaming, Inc. v. Int'l Game Tech., 184 F.3d 1339, 1345 (Fed. Cir. 1999); Central Soya Co. v. Geo. A. Hormel & Co., 723 F.2d 1573, 1575 (Fed. Cir. 1983); Princeton Biochemicals Inc. v. Beckman Instruments Inc., 180 F.R.D. 254, 259 (D.N.J. 1997); Amgen, Inc. v. Chugai Pharm. Co., 13 U.S.P.Q.2d 1737, 1741 (D. Mass. 1989); Am. Standard Inc. v. Pfizer, Inc., 722 F. Supp. 86, 90 (D. Del. 1989); E.I. duPont de Nemours & Co. v. Phillips Petroleum Co., 656 F. Supp. 1343, 1346 (D. Del. 1987).

206. *Novopharm Ltd.,* 181 F.R.D. at 310; *accord* Eaton Corp. v. Auburn Gear Inc., 8 U.S.P.Q.2d 1373, 1375 (N.D. Ind. 1988).

and reduction of expense to the parties."[207] "Moreover, separate trial of the issue of liability may present counsel the opportunity to obtain final settlement of that issue on appeal without having reached the often time-consuming and difficult damages question."[208]

4. *Infringement from invalidity*

Less frequently, courts bifurcate infringement issues from invalidity issues.[209]

5. *Antitrust from patent issues*

Courts may also bifurcate patent issues from antitrust issues.[210] A court noted what it described as the "now-standard practice of separating for trial patent issues and those raised in an antitrust counterclaim."[211]

---

207. Swofford v. B & W, Inc., 34 F.R.D. 15, 20 (S.D. Tex. 1963). *See also* Moore, *supra* note 199, at 235 (reporting that the fact finder found no liability in 42.8% of cases that were tried from 1983–2000).

208. *Swofford*, 34 F.R.D. at 20.

209. *See* Inland Steel Co. v. LTV Steel Co., 364 F.3d 1318, 1319 (Fed. Cir. 2004) (noting that district court trifurcated into infringement, invalidity, and damages trials); Tec Air, Inc. v. Denso Mfg. Mich. Inc., 192 F.3d 1353, 1357 (Fed. Cir. 1999) (same); Allen Organ Co. v. Kimball Int'l, Inc., 839 F.2d 1556, 1558 (Fed. Cir. 1988) (noting parties' agreement to bifurcate infringement issue from validity and enforceability issues); Stambler v. RSA Security, Inc., 123 Fed. Appx. 982, 986 (Fed. Cir. 2005) (unpublished) (finding no abuse of discretion in district court decision to bifurcate invalidity and infringement issues).

210. *E.g.,* Purdue Pharma L.P. v. Endo Pharms. Inc., 438 F.3d 1123, 1128 (Fed. Cir. 2006) (noting that the trial court bifurcated patent issues from antitrust and unfair trade claims); Arthrocare Corp. v. Smith & Nephew, Inc., 406 F.3d 1365, 1367 (Fed. Cir. 2005) (noting that the trial court bifurcated patent issues of infringement, invalidity, and inequitable conduct in first phase from damages, willfulness, and the antitrust counterclaim in second phase); Medtronic, Inc. v. Daig Corp., 789 F.2d 903, 904 (Fed. Cir. 1986) (noting that the trial court trifurcated case with the issues of patent validity and infringement to be tried first, the issues of damages relating to patent infringement to be tried second, and the issues of liability and damages relating to the antitrust and unfair competition claims to be tried last); Ashland Oil, Inc. v. Delta Oil Prods. Corp., 806 F.2d 1031, 1032 (Fed. Cir. 1986); Technicon Instruments Corp. v. Alpkem Corp., 866 F.2d 417, 418 (Fed. Cir. 1989).

211. *In re* Innotron Diagnostics, 800 F.2d 1077, 1084 (Fed. Cir. 1986). *See also* Henan Oil Tools, Inc. v. Eng'g Enters., Inc., 262 F. Supp. 629, 631 (S.D. Tex. 1966) ("It is common for courts to sever antitrust issues from patent validity and infringement issues."); Brandt, Inc. v. Crane, 97 F.R.D. 707, 708 (N.D. Ill. 1983) ("As a general rule, separate trials of patent and antitrust claims further the interests of convenience, expediency and economy."); Alarm Device Mfg. Co. v. Alarm Prods. Int'l, Inc., 60 F.R.D. 199, 202 (E.D.N.Y. 1973) ("More often than not, sepa-

"[T]he major consideration is directed toward the choice most likely to result in a just final disposition of the litigation."[212] A recurring concern is the complexity of patent issues and antitrust issues:

> Patent validity and infringement claims and antitrust actions both involve large and complex bodies of laws. Antitrust actions frequently require protracted trials. The burden placed on a trier of fact, be it judge or jury, in a case involving patent validity, patent infringement, patent misuse, unfair competition, antitrust violations, and an unlawful interference with contractual relationships, is at best a heavy one to bear.[213]

While many courts indicate a strong preference for bifurcating patent and antitrust issues, such separation is still discretionary. "[I]n any patent infringement suit in which antitrust is the basis of defense, or counterclaims, the court, pursuant to Rule 42(b) of the Federal Rules of Civil Procedure, should order separate trials of the antitrust and patent issues. . . . Several members disagree with this recommendation. They feel that judicial discretion, not restricted by a presumption in favor of separate trials, suffices to meet the problem."[214]

B. Time Limits at Trial

The court's inherent power to control cases includes the discretionary power to set time limits for a trial.[215] The time required for a patent trial can depend on many factors, including the complexity of the technology, the number of patents in suit, the number of asserted

---

rate trials of patent validity–infringement claims and misuse–antitrust claims have been found to be salutary.").

212. *In re* Innotron Diagnostics, 800 F.2d 1077, 1084 (Fed. Cir. 1986).

213. *Henan Oil Tools*, 262 F. Supp. at 631. *See also* Dentsply Int'l, Inc. v. New Tech. Co., Civ. A. No. 96-272 MMS, 1996 WL 756766, at *4–5 (D. Del. Dec. 19, 1996) (stating that avoiding jury confusion and expediting trial "[are] the primary end[s] to which any order of separate trials under Rule 42(b) [are] directed").

214. *Alarm Device Mfg.*, 60 F.R.D. at 202 (quoting *Report of the Attorney General's National Committee to Study the Antitrust Laws* 249 (1955)). *See also, e.g.*, Genentech Inc. v. Wellcome Found. Ltd., 14 U.S.P.Q.2d 1363, 1373 (D. Del. 1990) (denying bifurcation in part because "both the validity of the patents and the defense of fraudulent and inequitable conduct will require exploration of much of the same evidence that will be presented on Defendants' antitrust claim").

215. *See, e.g.*, Duquesne Light Co. v. Westinghouse Elec. Corp., 66 F.3d 604, 609 (3d Cir. 1995); Monotype Corp. PLC v. Int'l Typeface Corp., 43 F.3d 443, 450 (9th Cir. 1994); Johnson v. Ashby, 808 F.2d 676, 678 (8th Cir. 1987).

claims, the number of parties, and the number of different accused products. For example, the District of Delaware and the Eastern District of Texas currently schedule two weeks for a patent trial. Courts sometimes provide a time limit in hours for each party's entire presentation of evidence. Courts may also allow a separate amount of time for each of the following: jury voir dire, opening statements, interim summations, and closing arguments.

C. Motions In Limine

Patent cases raise many issues for motions in limine that are unique to patent litigation. Recurring issues include (1) limitations concerning inventor testimony, (2) expert testimony, (3) comparison of the accused products to embodiments of the patent, (4) commercial success of the patented invention, (5) a finding of validity of the same patent in other litigation, (6) reference to reissue or reexamination proceedings, (7) use of the word "monopoly," (8) evidence of foreign patents and proceedings, and (9) evidence relating to equitable issues tried separately before the court.

1. Inventor testimony

Courts may grant motions in limine to limit inventor testimony on the patent-in-suit depending on the subject of the proposed testimony. For example, inventor testimony "may not be used to vary, contradict, expand, or limit the claim language from how it is defined, even by implication, in the specification or file history."[216] Also, an inventor may not have "particularized knowledge and experience in the structure and workings of [an] accused device."[217]

On the other hand, inventors can explain the invention consistent with the specification and claims:

> An inventor is a competent witness to explain the invention and what was intended to be conveyed by the specification and cov-

---

216. Bell Atl. Network Servs., Inc. v. Covad Communications Group, Inc., 262 F.3d 1258, 1269 (Fed. Cir. 2001) (citing Vitronics Corp. v. Conceptronic, Inc., 90 F.3d 1576, 1584–85 (Fed. Cir. 1996)).

217. Air Turbine Tech., Inc. v. Atlas Copco AB, 410 F.3d 701, 714 (Fed. Cir. 2005); Cordis Corp. v. Boston Scientific Corp., No. Civ. 03-027 SLR, 2006 WL 1305227, at *14 (D. Del. May 11, 2006).

> ered by the claims. The testimony of the inventor may also provide background information, including explanation of the problems that existed at the time the invention was made and the inventor's solution to these problems.[218]

In addition, inventors may generally testify about enablement, conception, and reduction to practice.[219]

2. *Daubert and expert testimony*

Federal Rule of Evidence 702 allows testimony by experts if, among other requirements, it will "assist the trier of fact to understand the evidence or to determine a fact in issue."[220] The rule also specifies the necessary qualifications of an expert and the appropriate basis for the expert's opinion. Under Rule 702, an expert qualified "by knowledge, skill, experience, training, or education" may provide opinion testimony "if (1) the testimony is based upon sufficient facts or data, (2) the testimony is the product of reliable principles and methods, and (3) the witness has applied the principles and methods reliably to the facts of the case." While the general principles of Rule 702 apply equally to both patent and nonpatent cases, patent cases have some different and special limitations, including limitations on expert testimony relating to inadequate, untimely, or lack of disclosure; limitations on expert testimony on willfulness; and limitations on expert testimony regarding Patent Office procedures.

a. Limitations relating to inadequate, untimely, or lack of disclosure

According to the Federal Rules of Civil Procedure, expert testimony must be appropriately disclosed and supplemented, or it may be precluded from trial.[221] In patent cases, statutes and special Patent Rules add disclosure requirements for infringement contentions, invalidity contentions, and notice of prior art pursuant to 35 U.S.C. § 282. Inade-

---

218. Voice Techs. Group v. VMC Sys., Inc., 164 F.3d 605, 615 (Fed. Cir. 1999).

219. *See, e.g.*, MEMC Elec. Materials, Inc. v. Mitsubishi Materials Silicon Corp., No. C 01-4925 SBA, 2006 WL 463525, at *11 (N.D. Cal. Feb. 24, 2006).

220. Daubert v. Merrell Dow Pharms., Inc., 509 U.S. 579, 590 (1993).

221. Fed. R. Civ. P. 26(a)(2), 26(e)(1) & 37(c)(1).

quate, untimely, or lack of disclosure can appropriately lead to preclusion.[222]

b. Limitations on expert testimony on willfullness

Accused infringers often move under Federal Rules of Evidence 702 and 403 to preclude testimony by experts on the issue of whether infringement was willful. Courts may allow expert testimony on willfulness.[223] Some courts specifically preclude expert testimony on the law of willfulness, but otherwise allow expert testimony.[224]

c. Limitations on expert testimony regarding PTO procedures

While some courts allow expert testimony on PTO procedures, courts may also preclude expert testimony that indicates that PTO procedures are shoddy.[225] Courts view such testimony as an improper "attempt to

---

222. *See, e.g.*, TiVo v. EchoStar Communications Corp., No. 2:04-cv-1-DF, at 5 (E.D. Tex. Jan. 26, 2006) (precluding EchoStar's experts from referring to reverse doctrine of equivalents because of failure to appropriately disclose opinions); Immersion Corp. v. Sony Computer Entm't Am., Inc., No. C 02-0710 CW, at 3 (N.D. Cal. July 6, 2004) (precluding Sony from relying on any prior art not disclosed in its final invalidity contentions).

223. *In re* Hayes Microcomputer Prods., Inc. Patent Litig., 982 F.2d 1527, 1543 (Fed. Cir. 1992) (affirming decision allowing expert witness to testify in order to impeach defendant's defense that "a reasonable basis [existed] for believing in good faith that the [patent in suit] was invalid").

224. *E.g.,* Clintec Nutrition Co. v. Baxa Corp., No. 94 C 7050, 1998 WL 560284, at *9 (N.D. Ill. Aug. 26, 1998) (precluding expert testimony on the law regarding willfulness); Oxford Gene Tech., Ltd. v. Mergen Ltd., 345 F. Supp. 2d 431, 443 (D. Del. 2004) ("[The plaintiff's patent law expert] will not, however, be permitted to testify as to the legal standard for willfulness. Nor will she be permitted to testify as to whether [the defendant's] behavior met the standard of reasonableness, . . . or regarding [the defendant's] intent, motive, or state of mind, or evidence by which such state of mind may be inferred."). *But cf.* Pioneer Hi-Bred Int'l, Inc. v. Ottawa Plant Food, Inc., 219 F.R.D. 135, 142–43 (N.D. Iowa 2003) ("[T]he testimony of [the patent expert] regarding the sufficiency of the evidence of willful infringement is nevertheless inadmissible. This is so, because willful infringement is not an issue on which the court finds that expert testimony will assist the trier of fact to understand the evidence or determine the issue. *See* Fed. R. Evid. 702 (prerequisites to admission of expert testimony). Rather, 'willful infringement' is a matter for jury determination, in light of facts well within their understanding and appropriate instructions from the court.").

225. *See, e.g.*, Applied Materials, Inc. v. Advanced Semiconductors Materials Am., Inc., No. C 92-20643 RMW, 1995 WL 261407, at *3 (N.D. Cal. Apr. 25, 1995) (excluding expert testimony concerning overwork at the PTO and other matters insinuating that the PTO does not do its job properly as "irrelevant speculation"); Bausch & Lomb, Inc. v. Alcon Labs., Inc., 79 F. Supp. 2d 252, 255–56 (W.D.N.Y. 2000) (ruling inadmissible testimony on "the problems Examiners encounter with the completeness or 'file integrity' of the 'shoes' maintained at the PTO," "the difficulties Examiners face in discovering and obtaining prior art references other than patents,"

undermine the presumption of validity under 35 U.S.C. § 282 by inviting the jury to speculate about possible defects, errors, or omissions in the application process that led to the issuance of the patent-in-suit."[226]

Some judges like to show the jury the Federal Judicial Center's videotape on the Patent Office and its procedures, especially early in the case, to educate the jury on patents in general and to help them understand the appropriate context.[227]

3. *Comparison of accused product with embodiments of patent*

Under some circumstances, courts have granted motions to preclude evidence of the patentee's embodiment of the invention. Comparing the accused products to the patentee's embodiment of the invention is contrary to longstanding principles of patent law. "Specifications teach. Claims claim. . . . Infringement, literal or by equivalence, is determined by comparing an accused product not with a preferred embodiment described in the specification, or with a commercialized embodiment of the patentee, but with the properly and previously construed claims in suit."[228]

---

and "the time constraints under which Examiners in the PTO must operate"; "generalized testimony about 'problems' in the PTO is not admissible").

226. *Bausch & Lomb*, 79 F. Supp. 2d at 255. *See also, e.g.,* W. Elec. Co. Inc. v. Piezo Tech., Inc., 860 F.2d 428, 433 (Fed. Cir. 1988) ("It is no more appropriate to question a patent examiner's technical expertise than it is to question the quality of a judge's law school education or judicial experience."); Neutrino Dev. Corp. v. Sonosite, Inc., 410 F. Supp. 2d 529, 544 (S.D. Tex. 2006) ("The Court finds that, to the extent that [the expert's] testimony simply addresses the potential pressures and potential for error at the PTO, such testimony is inadmissible. Such general testimony tends to undermine the presumption of validity.") (citation omitted).

227. *See, e.g.*, Minebea Co. v. Papst, No. Civ.A. 97-0590(PLF), 2005 WL 1459704, at *7 (D.D.C. June 21, 2005) (stating "that the jury will be shown a videotape prepared by the Federal Judicial Center on the practices and procedures of the USPTO immediately after the Court's preliminary instructions"); *see also* An Introduction to the Patent System (Federal Judicial Center 2002).

228. SRI Int'l v. Matsushita Elec. Corp. of Am., 775 F.2d 1107, 1121 & n.14 (Fed. Cir. 1985) (en banc); *accord* Phillips v. AWH Corp., 415 F.3d 1303, 1323 (Fed. Cir. 2005) (en banc) ("[A]lthough the specification often describes very specific embodiments of the invention, we have repeatedly warned against confining the claims to those embodiments."); Laitrim Corp. v. Cambridge Wire Cloth Co., 863 F.2d 855, 865 (Fed. Cir. 1988) ("References to a preferred embodiment, such as those often present in a specification, are not claim limitations.").

4. *Commercial success of the patented invention*

Evidence related to the patentee's invention can be relevant to secondary considerations of nonobviousness and, in particular, commercial success.[229] The Federal Circuit noted that "evidence rising out of the so-called 'secondary considerations' must always when present be considered en route to a determination of obviousness."[230] As a limit on evidence of commercial success, "[a] nexus is required between the merits of the claimed invention and the evidence offered."[231] This is to ensure that evidence of commercial success is attributable to the inventions of the claims at issue, "rather than to extraneous factors such as advertising and marketing or to the features" outside the claims.[232]

5. *Finding of validity of same patent in other litigation*

The effect of a first litigation regarding the validity of a patent may be the subject of a motion in limine in a second litigation. Generally, a prior judgment of no invalidity does not preclude a different accused infringer from arguing that the same patent is invalid in the second litigation.[233]

In a second litigation between the same parties regarding the same patent, the first settlement or judgment "would operate to bar a challenge to the validity of the patent claims at issue in the first suit only if the accused device was 'essentially the same' as the previous device admitted to infringe, or that any changes were merely 'colorable' or 'unrelated to the limitations in the claims of the patent.'"[234] "[I]f the devices were not essentially the same, in which case the suit was based on a different claim—i.e., a cause of action for infringement different

---

229. *See* Graham v. John Deere Co., 383 U.S. 1, 17 (1966).

230. Stratoflex, Inc. v. Aeroquip Corp., 713 F.2d 1530, 1538 (Fed. Cir. 1983).

231. *Id.* at 1539; *In re* GPAC Inc., 57 F.3d 1573, 1580 (Fed. Cir. 1995) ("Because GPAC has not met its burden . . . to demonstrate that the commercial success of [the] invention resulted directly from the subject matter claimed in the [patent in suit], we conclude that the nexus requirement of *Stratoflex* is not satisfied."); *In re* Paulsen, 30 F.3d 1475, 1482 (Fed. Cir. 1994) ("When a patentee offers objective evidence of nonobviousness, there must be a sufficient relationship between that evidence and the patented invention.").

232. *Paulsen*, 30 F.3d at 1482.

233. Grayson v. McGowan, 543 F.2d 79, 81 (9th Cir. 1976) (citing Blonder-Tongue Labs., Inc. v. Univ. of Ill. Found., 402 U.S. 313, 329 (1971)).

234. Hallco Mfg. Co. v. Foster, 256 F.3d 1290, 1295 (Fed. Cir. 2001) (citing Foster v. Hallco Mfg., 947 F.2d 469, 479–80 (Fed. Cir. 1991)).

from the cause of action in the earlier litigation— . . . there would be no claim preclusion to bar the attack on validity."[235]

6. *Reference to reissue or reexamination proceedings*

A court may preclude evidence of a reissue or reexamination proceeding in the PTO on a motion in limine pursuant to Federal Rule of Evidence 403.[236]

Considering grants of requests for reexaminations, for example, courts have recognized that "the Patent Office's decision to grant reexamination casts the validity of the patent into some doubt, but only to a small degree."[237] On the other hand, the potential prejudice when calling into doubt the presumption of validity is significant.[238] Whether documents in a reexamination other than the PTO's initial grant of reexamination should be precluded is a closer question.[239]

7. *Use of the word "monopoly"*

A court may preclude an accused infringer from using the term "monopoly" in reference to the patent-in-suit as being prejudicial.[240] Other case-specific circumstances may change the balancing under Rule 403.[241]

---

235. *Hallco*, 256 F.3d at 1295.

236. *See, e.g.*, Amphenol T&M Antennas Inc. v. Centurion Int'l Inc., 69 U.S.P.Q.2d 1798, 1800 (N.D. Ill. 2002); Lemelson v. Gen. Mills, Inc., No. 77 C 4558, 1987 WL 16226, at *1 (N.D. Ill. Aug. 24, 1987) (denying reconsideration of order granting motion in limine to exclude evidence of reissue proceeding because "the probative value of testimony concerning the reissue proceedings is substantially outweighed by the danger of unfair prejudice, confusion of the issues and misleading the jury").

237. *Amphenol*, 69 U.S.P.Q.2d at 1800. *See also* Hoechst Celanese Corp. v. BP Chems. Ltd., 78 F.3d 1575, 1584 (Fed. Cir. 1996) ("[T]he grant by the examiner of a request for reexamination is not probative of unpatentability."); Soverain Software LLC v. Amazon.com, Inc., 356 F. Supp. 2d 660, 662 (E.D. Tex. 2005) (observing that "over 90% of all reexamination requests are granted"); IMAX Corp. v. In-Three, Inc., 385 F. Supp. 2d 1030, 1033 n.1 (C.D. Cal. 2005) ("Only 12% of requests for reexamination from third parties result in claims being eliminated.").

238. *Amphenol*, 69 U.S.P.Q.2d at 1800.

239. Price v. Code-Alarm, Inc., No. 91 C 699, 1992 WL 390895, at *4 (N.D. Ill. Dec. 16, 1992) (deferring decision until trial).

240. *See, e.g.*, Jamesbury Corp. v. Litton Indus. Prods., Inc., 756 F.2d 1556, 1559 (Fed. Cir. 1985); Panduit Corp. v. Stahlin Bros. Fibre Works, Inc., 575 F.2d 1152, 1160 n.8 (6th Cir. 1978) (noting "monopoly" is a "pejorative term").

241. *See* THK Am., Inc. v. NSK, Ltd., 917 F. Supp. 563, 571 (N.D. Ill. 1996) (denying motion to preclude use of term "monopoly" before the jury because the term existed in other

8. *Evidence of foreign patents and proceedings*

Courts have considered whether to preclude evidence of foreign patents and proceedings under Federal Rule of Evidence 403.[242] A court could conclude in a particular case that foreign patents and proceedings would cause jury confusion, prejudice, and waste of time and thus preclude the foreign patent materials.

9. *Evidence related to decisions for the court*

A court may limit or preclude evidence if the jury may be improperly affected by evidence it hears relating to issues it does not decide. In patent cases, these issues include inequitable conduct, injunction, and treble damages.[243] For example, regarding the issue of injunctive relief, the court in *THK America Inc. v. NSK, Ltd.*[244] recognized that an accused infringer may try "to exploit the notion of injunctive relief in a way designed to elicit sympathy to [it] for the effects of the injunctive relief upon its work force or for any other non-relevant references."[245] The ultimate decision may depend on other case-specific facts, such as whether the party moving to preclude intends to discuss injunctive relief.[246]

Regarding the issue of treble damages, courts have determined that informing a jury about the possibility of treble damages "would serve no useful function and its probable consequence would be harmful—

---

documentary evidence and could not be excised from the documents without destroying the context).

242. *E.g.,* Max Daetwyler Corp. v. Input Graphics, Inc., 583 F. Supp. 446, 457 (E.D. Pa. 1984) (denying motion and stating that any prejudice can be addressed by allowing additional evidence or a curative or limiting instruction). Courts recognize that foreign patent law and procedures are different and have no affect on validity or infringement of claims in U.S. patents. *E.g.,* Application of Dulberg, 472 F.2d 1394, 1398 (C.C.P.A. 1973) ("We need not even consider the actions taken in foreign countries with regard to the patentability of this application under our law. The granting of a patent on an 'invention' in a foreign country has no relevance to the determination of whether the same 'invention' would be obvious within the ambit of § 103 since it is notoriously well known that the standards of patentability vary from country to country.").

243. *See, e.g., THK Am.*, 917 F. Supp. at 571 (noting motions in limine regarding reference at trial to the issues of inequitable conduct and injunctive relief).

244. 917 F. Supp. 563 (N.D. Ill. 1996).

245. *Id.* at 572.

246. *See id.* at 571–72.

an impermissible lowering of the amount of damages."[247] Accordingly, a court could appropriately grant a motion in limine to preclude mention of treble damages.

247. Pollock & Riley, Inc. v. Pearl Brewing Co., 498 F.2d 1240, 1243 (5th Cir. 1974); *accord* Semke v. Enid Auto. Dealers Ass'n, 456 F.2d 1361, 1370 (10th Cir. 1972).

Blank pages inserted to preserve pagination when printing double-sided copies.

Chapter 11: Trial[248]

Most, but not all, patent cases involve jury trials. For example, cases involving Abbreviated New Drug Applications are not tried to a jury, and parties remain free to waive their right to a jury trial even on those issues where such a right exists.

A. Pretrial Order

Pretrial orders can be more complicated in patent cases than in other civil cases because patent cases often involve many issues, claims, defenses, and counterclaims. For example, the defendant accused of infringing the plaintiffs' patent may also bring counterclaims alleging that the plaintiff infringes a different patent owned by the defendant. The defendant may also assert that the plaintiff has committed business torts by alleging infringement or informing the defendant's customers about the lawsuit and suggesting that the customers should stop buying the defendant's product. The defendant also may allege that the plaintiff has violated the antitrust laws by misusing its patent, such as by tying unpatented products with the patented product or engaging in licensing schemes that extend beyond the expiration date of the patent. In cases involving multiple patents, or complex defenses and counterclaims, the parties may not follow the typical order of presentation of evidence, and the pretrial order should specifically address this issue.

B. Selecting the Jury

Patent cases can involve unique potential bias concerns, including biases in favor of companies that are known as innovative, biases for or against well-known companies, and biases for or against small inventors. In addition, jurors may give deference to the PTO because they see it as an expert agency that issued an important document with important rights to the patentee. Jury questionnaires are important in patent cases to help ferret out such biases.

---

248. George F. Pappas, Covington & Burling LLP, Washington, D.C. The assistance of Kevin B. Collins and Scott C. Weidenfeller in preparing this material is greatly appreciated.

Another important consideration in selecting jurors in patent cases is the juror's scientific, technical, or financial expertise. Because patent cases often involve complicated technical and financial issues, individuals with some level of expertise in those fields may dominate the jury room without giving either party the opportunity to cross-examine their statements. Even if they do not exercise undue influence on other jurors, they may suffer more acutely than other jurors from "hindsight bias" and may have more difficulty casting their minds back to the time of the invention when evaluating obviousness, because of their experience with the same or similar technical matters. Thus, jury questionnaires often ask questions about the jurors' technical or financial expertise, and challenges based on those responses should be considered carefully.

C. Use of Jury Notebooks

It can be beneficial to provide jurors with notebooks with key documents and exhibits to which the jurors can refer when appropriate.[249] Such notebooks may include the court's claim constructions, jury instructions, the patent, key excerpts from the file history of the patent, prior-art references used in the accused infringer's invalidity case, and key documents used in the patentee's infringement case, such as technical documents describing the accused infringing product. Selection of such documents is likely to be contentious. Care should be taken in the selection of documents included in such notebooks, however, to avoid overly emphasizing particular documents on the one hand, or overwhelming the jury with voluminous exhibits on the other.

Even courts that do not provide evidentiary notebooks to the jurors often provide them with blank notebooks for note taking, so that the jurors may attempt to keep track of the complex evidence presented.

---

249. *See, e.g.,* PMG, Inc. v. Lockheed Martin Idaho Techs., Inc., No. CV-02-539-E-BLW, 2006 WL 1207609, at *3 (D. Idaho Apr. 27, 2006) (noting that the court had encouraged counsel to create jury notebooks); John Mezzalingua Assocs., Inc. v. Aries Int'l, Inc., No. 03-C-353-C, 2003 WL 23273967, at * 1 (W.D. Wis. Nov. 26, 2003) (noting that counsel were preparing jury notebooks "that will include a copy of the patent and other materials that will help the jurors follow the evidence and the arguments in the case").

D. Opening Statements and Burdens of Proof, Preliminary Jury Instructions

Preliminary jury instructions can be helpful in identifying which party bears the burden of proof and in explaining the applicable burden of proof to the jury. The preliminary jury instructions can be helpful in describing to the jury the exclusionary right a patent provides, the parts of a patent, and the process of obtaining a patent from the PTO. The preliminary jury instructions may also describe the concept of prior art and how it can invalidate the patent claims. Many courts also provide the jurors with the construction of the claim terms at this stage of the case. Sample preliminary jury instructions can be found in the Uniform Jury Instructions for Patent Cases in the U.S. District Court for the District of Delaware, the Federal Circuit Bar Association Model Patent Jury Instructions, and the Model Patent Jury Instructions for the Northern District of California. *See infra* Chapter 11.G.

In addition, the Federal Judicial Center's 2002 video, *An Introduction to the Patent System*, provides background information that can be helpful to jurors. The video covers basic patent issues, the process of obtaining patents from the PTO, and patent infringement suits. The video is designed to be impartial and objective and to favor neither the patentee nor the accused infringer.[250]

Typically, the patentee will not assert that the accused infringer infringes all of the claims in the patent; rather, the patentee will select one or more of the claims in the patent to assert against the accused infringer.

The patentee's opening statement introduces the patent to the jury and identifies the claims at issue in the case. The patentee bears the burden of proving infringement by a preponderance of the evidence.[251] The patentee must show that each limitation of the asserted claim is present in the accused product or method, or that the accused product

---

250. The video is approximately seventeen minutes in length, and it can be downloaded, along with an accompanying sample patent, from the Federal Judicial Center's website at http://www.fjc.gov/public/home.nsf/pages/557. Judges and court employees may also order a VHS or DVD copy of the video by contacting the Federal Judicial Center.

251. *See, e.g.,* Cross Med. Prods., Inc. v. Medtronic Sofamor Danek, Inc., 424 F.3d 1293, 1310 (Fed. Cir. 2005).

or method includes an equivalent to each limitation pursuant to the doctrine of equivalents.

In virtually every patent case, the accused infringer will assert as a defense to infringement that the asserted patent claims are invalid, usually because information already known in the field of the invention (called "prior art") describes the invention or makes the invention obvious to a person skilled in the field.[252] The accused infringer may also argue that the claims are invalid because the patentee did not adequately describe the claimed invention or did not describe the best mode the patentee knew for practicing the invention.[253] The accused infringer's opening statement will describe the grounds on which it asserts noninfringement and invalidity, and will briefly describe the pertinent prior art. In contrast to the burden of proof for infringement, the accused infringer bears the burden of proving the invalidity of the asserted claims of the patent by clear and convincing evidence because a patent is presumed valid once issued pursuant to 35 U.S.C. § 282.[254]

The accused infringer may also allege that the patent is unenforceable because the patentee committed inequitable conduct in procuring the patent from the Patent and Trademark Office by failing to disclose material information to the PTO, by making a material misrepresentation to the PTO, or by submitting false material information to the PTO with the intent to deceive the PTO.[255] Issues underlying the equitable determination of whether the patent is unenforceable because of the patentee's inequitable conduct in procuring the patent are for the judge, not the jury, to decide on a clear and convincing burden of proof.[256] Nevertheless, the judge can elect to have the issues tried to the jury; the jury can render an advisory verdict on the issues of materiality and intent, which underlie the inequitable conduct determination.[257] If these issues are presented to the jury, the opening statements or pre-

252. *See* 35 U.S.C. §§ 102, 103 (2000).

253. *See id.* § 112.

254. *See, e.g.*, Nystrom v. TREX Co., 424 F.3d 1136, 1149 (Fed. Cir. 2005).

255. *See, e.g.*, Warner-Lambert Co. v. Teva Pharms. USA, Inc., 418 F.3d 1326, 1342 (Fed. Cir. 2005).

256. *See* Duro-Last, Inc. v. Custom Seal, Inc., 321 F.3d 1098, 1110 (Fed. Cir. 2003).

257. *See id.*

liminary jury instructions should introduce the concepts of materiality and intent to the jury.[258]

Finally, accused infringers in patent infringement cases often bring antitrust and other tort claims as counterclaims. The jury must be informed about the elements of these claims, as well as the applicable burden of proof, which is typically a preponderance of the evidence. However, many of these claims may be preempted by the federal patent laws unless the patentee has engaged in "sham litigation."[259] Preliminary jury instructions or statements by the parties regarding the sham litigation standard may also be beneficial to the jury.

E. Presentation of the Evidence

Patent cases involve shifting burdens of proof that may complicate or change the order of presentation of evidence at trial. For example, because patents are presumed valid pursuant to 35 U.S.C. § 282, the patentee need not offer any evidence that the patent is valid.[260] However, if the accused infringer makes out a prima facie case that the patent is obvious, the burden of production (but not the burden of persuasion), shifts to the patentee to show that one or more of the objective considerations of nonobviousness[261] apply to make the invention nonobvious.[262] In a case involving obviousness, the patentee may either offer evidence related to the objective considerations of nonobviousness as

---

258. *Warner-Lambert*, 418 F.3d at 1342–43.

259. *See, e.g.*, Globetrotter Software, Inc. v. Elan Computer Group, Inc., 362 F.3d 1367, 1376–77 (Fed. Cir. 2004).

260. *See, e.g.*, Orthokinetics, Inc. v. Safety Travel Chairs, Inc., 806 F.2d 1565, 1570 (Fed. Cir. 1986); ABB Air Preheater, Inc. v. Regenerative Envtl. Equip. Co., 167 F.R.D. 668, 673 (D.N.J. 1996).

261. Graham v. John Deere Co., 383 U.S. 1, 17–18 (1966). The objective considerations of nonobviousness include commercial success of products embodying the invention, a long-felt need for the invention, failure by others who attempted to make the invention, copying of the invention by others, unexpected results achieved by the invention, praise of the invention by others in the field, the taking of licenses under the patent, industry acceptance, and expressions of skepticism or disbelief by those in the field when the invention was made. *See* Brown & Williamson Tobacco Corp. v. Philip Morris Inc., 229 F.3d 1120, 1129 (Fed. Cir. 2000); *In re* Rouffet, 149 F.3d 1350, 1355 (Fed. Cir. 1998).

262. *See, e.g.*, Ashland Oil, Inc. v. Delta Resins & Refractories, Inc., 776 F.2d 281, 291–92 (Fed. Cir. 1985); *ABB Air Preheater*, 167 F.R.D. at 673.

part of its initial presentation of evidence or wait until the accused infringer has made out its prima facie case of obviousness.

In complex patent cases, courts often sever certain issues from the patent issues. *See generally* Chapter 10.A. Such bifurcation can simplify the presentation of evidence to the jury, separating the issues on which the patentee has the burden of proof from the issues on which the accused infringer has the burden of proof.

Courts also may encourage lawyers to use electronic technology and visual aids, such as slides summarizing key points, in their presentations of evidence. Such visuals can help to make the complex issues involved in patent litigation more understandable to jurors.

1. Infringement

The patentee bears the burden of proving infringement, and the patentee usually will offer a witness to provide important background information about the field of the invention and to tell the story of the invention. The inventor can be the ideal witness in these areas, as he or she typically is skilled in the field covered by the patent and has unique credentials regarding the invention itself. Having the inventor speak about the patent and the invention can also humanize what could otherwise be seen as arcane technology. The inventor often will be called to testify regarding the nature of the field of technology prior to the invention, the invention itself, and, in certain cases, the products accused of infringement and the differences between the prior art and the claimed invention. The inventor can also describe the ideas underlying the invention and the advances he or she made over what was known.

Although to prove literal infringement a patentee "can employ any method of analysis that is probative of infringement,"[263] expert testimony is generally helpful and, in cases involving complex technology, may be necessary to satisfy the patentee's burden of proof.[264] The patentee can also prove infringement pursuant to the doctrine of equivalents, which is designed to prevent infringers from avoiding liability by making insubstantial changes to their products that fall outside the lit-

---

263. Forest Labs., Inc. v. Abbott Labs., 239 F.3d 1305, 1312 (Fed. Cir. 2001). For a general review of pleading infringement, see *supra* Chapter 2.A.

264. *See, e.g.*, Centricut, LLC v. Esab Group, Inc., 390 F.3d 1361, 1369–70 (Fed. Cir. 2004).

eral scope of the claims while remaining essentially identical to the claimed invention.[265] To prove infringement under the doctrine of equivalents, the patentee must provide "particularized testimony and linking argument" on a limitation-by-limitation basis showing how the accused infringing device or process is equivalent to the claimed invention.[266]

2. *Validity*

The accused infringer bears the burden of proving that the patent is invalid. Like the patentee's technical expert's testimony regarding infringement, the accused infringer's technical expert's testimony will set forth the accused infringer's invalidity allegations limitation-by-limitation, showing where each limitation of the claimed invention is found in the prior art.

If the accused infringer sets forth a prima facie case that the patent is obvious and therefore invalid, the patentee may provide testimony from one or more witnesses regarding the objective indicia of nonobviousness to rebut the prima facie case.[267]

3. *Inequitable conduct and other counterclaims*

If the accused infringer has brought an allegation of inequitable conduct or other counterclaims, such as allegations that the patentee committed business torts or antitrust violations, the accused infringer will have one or more witnesses, often experts, testify about those matters. For example, an accused infringer alleging that the patentee committed inequitable conduct may call an expert witness to testify about the practices and procedures before the PTO and identify the patentee's omissions or misrepresentations to the PTO during the prosecution of the patent. Similarly, the accused infringer may offer testimony regarding the appropriate market if the accused has brought antitrust counterclaims against the patentee. The patentee may also offer expert testimony to rebut the accused infringer's allegations.

---

265. *See, e.g.*, Graver Tank & Mfg. Co. v. Linde Air Prods. Co., 339 U.S. 605, 608 (1950).

266. *See, e.g.*, Network Commerce, Inc. v. Microsoft Corp., 422 F.3d 1353, 1363 (Fed. Cir. 2005) (quoting Tex. Instruments Inc. v. Cypress Semiconductor Corp., 90 F.3d 1558, 1567 (Fed. Cir. 1996)).

267. *See id.*; *see, e.g., Ashland Oil*, 776 F.2d at 291–92; *ABB Air Preheater*, 167 F.R.D. at 673.

4. *Damages*

Finally, the patentee generally calls a damages expert to set forth the analysis underlying the damages to which it asserts it is entitled. Damages can be awarded based on either a lost profits or a reasonable royalty theory, and, as in any other case, the expert should explain how he or she applied the relevant factors to arrive at the amount sought by the patentee. Unlike many other cases, though, the damages analysis can be very complicated, as determining the profits lost as a result of infringement or the outcome of a hypothetical negotiation between the patentee and the infringer at the time infringement began can be very complicated. The damages expert typically will apply the multifactor analyses as set forth in *Panduit Corp. v. Stahlin Brothers Fibre Works, Inc.*[268] for lost profits and in *Georgia-Pacific Corp. v. United States Plywood Corp.*[269] for reasonable royalty.

To obtain damages for lost profits on sales the patentee would have made absent the infringement pursuant to *Panduit*, the patentee must prove: (1) that there is demand for the patented product, (2) the absence of acceptable noninfringing substitutes, (3) the patentee's manufacturing and marketing capability to exploit the demand, and (4) the amount of the profit the patentee would have made.[270] *Georgia-Pacific* sets forth a "comprehensive list of evidentiary facts relevant, in general, to the determination of the amount of a reasonable royalty for a patent license": (1) royalties received by the patentee for licenses to the patent in suit; (2) royalty rates paid by the licensee for licenses to comparable patents; (3) the nature and scope of the license, including exclusivity and restrictions on the license; (4) the patentee's policy either not to license or to place conditions on licenses; (5) the commercial relationship between the licensor and the licensee; (6) the effect of the patent on promoting "convoyed sales," or sales of other products not covered by the patent; (7) the durations of the patent and the license; (8) the commercial success of the patented product; (9) the advantages of the patent over the prior art; (10) the nature of the patented invention and the character of the accused infringing product; (11) the extent and

268. 575 F.2d 1152 (6th Cir. 1978).
269. 318 F. Supp. 1116 (S.D.N.Y. 1970).
270. *See Panduit*, 575 F.2d at 1156.

value of the infringing use to the infringer; and (12) the customary royalty rates in the industry for analogous inventions.[271]

The accused infringer generally will offer expert testimony to rebut the patentee's damages case and to argue for a substantially lower damages award. *See also supra* Chapter 2.B.

F. Closing Arguments

Special verdict forms are particularly important in patent cases because of the complex issues that the jury must resolve. The parties' arguments should closely track the special verdict form to be submitted to the jury. The forms are typically very detailed, setting forth the pertinent burdens of proof and often requiring the jury to set forth its verdicts on infringement and invalidity claim-by-claim.

G. Instructions to the Jury

Because patent cases offer complicated issues that can seem arcane to jurors, extensive jury instructions are often necessary to describe, in plain English, the applicable patent law and issues in the case. The jury instructions should provide a brief background of the technology involved in the patent and explain what a patent is and the process of obtaining a patent. The instructions should also clarify the court's role in determining the meaning of the claims, and the relevant patent law of infringement, invalidity, and unenforceability, where appropriate. The instructions should set forth the relevant law of damages, explaining the law underlying the relevant damages theory or theories. In many cases, jury instructions will also provide a glossary of the technical or legal terms the jury will hear throughout the trial. In all instances, the jury instructions should clearly set forth the burdens of proof and identify the party that bears the burden of proof.

In many instances, it can be beneficial to break jury instructions into two sets of instructions. First, preliminary jury instructions can be read to the jury before the presentation of the evidence to inform the jurors about the basics of patents, the process of obtaining patents, claim construction, and the pertinent law of infringement, invalidity, damages, and other relevant areas. Final jury instructions, which set

271. *See Georgia-Pacific*, 318 F. Supp. at 1120.

forth more detailed information about the burdens of proof and the particular patent law and damages doctrines involved in the case, can be read to the jury after the closing arguments to provide the jurors a more extensive basis for their deliberations. Many courts permit the jury to take the jury instructions into the jury room, where such instructions can be essential in helping the jury work through the complicated issues in patent cases. Other courts permit the jury to listen to a recording of the jury instructions as they were read by the court.

Several courts and bar associations have prepared excellent model jury instructions: the Uniform Jury Instructions for Patent Cases in the U.S. District Court for the District of Delaware; the Federal Circuit Bar Association Model Patent Jury Instructions; and the Model Patent Jury Instructions for the Northern District of California.[272]

272. For the District of Delaware instructions, go to http://www.ded.uscourts.gov/jury/Patent%20Jury%20Instructions.pdf; for the Federal Circuit Bar Association instructions (fee required), go to https://www.memberconnections.com/olc/pub/LVFC/events/LVFC2105558.html; for the Northern District of California instructions, go to http://www.cand.uscourts.gov/CAND/FAQ.nsf/60126b66e42d004888256d4e007bce29/4b43c2137e17e03a88257393007bac13?OpenDocument.

Chapter 12: Posttrial Proceedings[273]

A. Motions for Judgment as a Matter of Law and New Trial

Standards for motions for judgment as a matter of law and a new trial are the same in patent cases as in other civil cases.

B. Inequitable Conduct

Inequitable conduct refers generically to a breach of duty of candor and good faith to the U.S. Patent and Trademark Office. Applicants for patents are required to prosecute patent applications in the PTO with candor, good faith, and honesty.[274] Inequitable conduct includes affirmative misrepresentation of material fact, failure to disclose material information, or submission of false material information, coupled with an intent to deceive.[275] The established remedy for inequitable conduct is unenforceability of the patent, regardless of the patent's validity or infringement.

The determination of inequitable conduct is committed to the trial court's discretion.[276] The court's authority to render a patent unenforceable for inequitable conduct is founded in the equitable principle that "he who comes into equity must come with clean hands."[277] The Federal Circuit has recognized that there are several ways in which a trial court may handle the issue of inequitable conduct during a jury trial. Absent a clear showing of prejudice or failure to achieve a fair trial, the trial court's choice of procedure will not be disturbed.[278] First, the court may reserve the issue of inequitable conduct for itself. The Federal Circuit held that a trial court could also sever the issue of inequitable conduct and try it separately without a jury trial.[279] *See also supra* Chapter 10.A.1. Specifically, the trial court can sever the issue of

---

273. Michael O. Warnecke, Perkins Coie LLP, Chicago, Illinois.
274. Molins PLC v. Textron, 48 F.3d 1172, 1178 (Fed. Cir. 1995).
275. *Id.*
276. Hoffman-La Roche Inc. v. Promega Corp., 325 F.3d 1354 (Fed. Cir. 2003).
277. Dayco Prods., Inc. v. Total Containment, Inc., 329 F.3d 1358, 1364 (Fed. Cir. 2003).
278. Hebert v. Lisle Corp., 99 F.3d 1109, 1114 (Fed. Cir. 1996).
279. Agfa Corp. v. Creo Prods. Inc., 451 F.3d 1366 (Fed. Cir. 2006).

inequitable conduct so long as none of the other claims to be resolved in the case involve common issues.[280] Next, the court can submit special interrogatories to the jury on the facts of materiality and intent.[281] Finally, the court can instruct the jury to both find and weigh the facts of materiality and intent and also to decide the ultimate question of inequitable conduct.[282]

Because courts presume a patent is valid, unenforceability based on inequitable conduct requires proof of materiality and intent by clear and convincing evidence.[283] The trial court must weigh the threshold findings of materiality and intent in light of all the circumstances to determine whether the patent applicant's conduct warrants a conclusion that the patent should be held unenforceable.[284] Common acts of nondisclosure and misrepresentation by patent applicants that have been found to constitute inequitable conduct are where the applicant failed to disclose prior art, failed to disclose the best mode of the invention, misrepresented test data, and failed to report public-use and on-sale bars to the Patent Office.

A finding of inequitable conduct in procuring a patent will render the patent unenforceable and permit the public to practice the invention without risk of patent infringement. When a court has finally determined that inequitable conduct occurred in relation to one or more claims during prosecution of the patent application, the entire patent is rendered unenforceable, not merely those claims directly affected by the misconduct.[285]

---

280. *See* Garco Mfg. Inc. v. Herst Lighting Co., 820 F.2d 1209, 1213 (Fed. Cir. 1987) ("[T]he *conduct-of-the-applicant-in-the-PTO* issue raised in the non-jury trial and the separated infringement/validity issues are distinct and without commonality either as claims or in the relation to the underlying fact issues." (emphasis in original)).

281. *Hebert*, 99 F.3d at 1114; Duro-Last, Inc. v. Custom Seal, Inc., 321 F.3d 1098, 1110 (Fed. Cir. 2003) ("A trial court has some discretion in choosing whether to submit special interrogatories to the jury regarding the underlying facts.").

282. Juicy Whip v. Orange Bang, 292 F.3d 728, 737 (Fed. Cir. 2002).

283. Kingsdown Med. Consultants, Ltd. v. Hollister Inc., 863 F.2d 867, 872 (Fed. Cir. 1988).

284. *Molins*, 48 F.3d at 1178.

285. *See* Lummus Indus., Inc. v. D.M. & E. Corp., 862 F.2d 267, 274 (Fed. Cir. 1988) ("The principle is well-settled that if inequitable conduct is established as to any claim, all claims of the patent are rendered unenforceable."); Consolidated Aluminum Corp. v. Foseco Int'l Ltd., 910 F.2d 804, 809 (Fed. Cir. 1990) (holding several related patents unenforceable because of inequitable conduct).

It is appropriate to give the same extent of unenforceability, with respect to inequitable conduct, to a reissued patent as to an original patent.[286] The same level of misconduct is required in both instances. The Federal Circuit has made clear that a reissue is not available to obtain new claims and thereby rehabilitate a patent.[287]

Continuation applications or divisional applications emanating from a parent application procured by inequitable conduct may be deemed unenforceable. However, where the claims of a divisional application are subsequently separated from those of a parent application tainted by inequitable conduct, and the issued divisional claims have no relation to the omitted prior art, the divisional patent will not also be unenforceable because of inequitable conduct committed in the parent application.[288]

Other potential consequences of a finding of inequitable conduct may include an award of attorneys' fees under 35 U.S.C. § 285 if the case is deemed to be exceptional by the court, sanctions against the attorney under Federal Rule of Civil Procedure 11, and antitrust liability under § 2 of the Sherman Act (15 U.S.C. §§ 1–7).

C. Damages

1. *Supplemental damages*

Supplemental damages can be awarded to compensate a plaintiff for any infringement occurring between the date of the jury's verdict and the date of the judgment.[289] A failure to award such damages would grant an infringer a windfall by enabling it to infringe without compensating a plaintiff for the period of time between the jury's verdict and the judgment.[290]

---

286. Hewlett-Packard Co. v. Bausch & Lomb, Inc., 882 F.2d 1556, 1563 (Fed. Cir. 1989).

287. *Id.* (reissue is unavailable to rescue patentee who committed inequitable conduct during original prosecution).

288. Baxter Int'l, Inc. v. McGaw, Inc., 149 F.3d 1321 (Fed. Cir. 1998).

289. Stryker Corp. v. Davol Inc., 234 F.3d 1252, 1259 (Fed. Cir. 2000).

290. Nat'l Instruments Corp. v. Mathworks, Inc., 2003 U.S. Dist. LEXIS 25863, 11–12 (D. Tex. 2003), *aff'd*, 164 Fed. Appx. 997 (Fed. Cir. 2006).

The trial court has broad discretion to weigh and balance multiple factors to determine an appropriate supplemental damage award.[291] The court can apply the royalty rate determined by the jury to assess post-verdict sales.[292] The court can also extrapolate a royalty rate from the jury's verdict.[293] Post-verdict supplemental damages can also be measured by the infringer's profits.[294]

2. *Prejudgment interest*

Section 284 of title 35 of the U.S. Code provides for prejudgment interest. Prejudgment interest is to be awarded on patent infringement damages measured both by lost profits and by reasonable royalty absent some justification for denying such relief.[295] Prejudgment interest is interest on a monetary judgment against an infringer awarded to a prevailing party measured from the date of the infringement to the date of the judgment. It is designed to compensate for the delay a patentee experiences in obtaining money it would have received sooner if no infringement had occurred.[296] Where no statute specifically authorizes an award of prejudgment interest, such an award lies within the discretion of the court as part of its equitable powers.[297]

In exercising its discretion, the trial court must be guided by the purpose of prejudgment interest, which is to ensure that the patent owner is placed in as good a position as it would have been had the infringer entered into a reasonable royalty agreement when the infringement began.[298] The rationale for awarding interest to successful plaintiffs is not particular to patent law; prejudgment interest, like all

---

291. *Id.*; *see also* SRI Int'l, Inc. v. Advanced Tech. Labs., Inc., 127 F.3d 1462, 1468–1469 (Fed. Cir. 1997).

292. Stryker Corp. v. Davol, Inc., 75 F. Supp. 2d 746, 747 (W.D. Mich. 1999) (awarding supplemental damages based on the jury's determination of a reasonable royalty rate of 20% of infringing sales over a one-month period between verdict and injunction).

293. Oscar Mayer Foods Corp. v. Conagra, Inc., 869 F. Supp. 656, 668 (W.D. Wis. 1994) (awarding supplemental damages at the jury-determined royalty rate applied to a post-verdict revenue).

294. Padco, Inc. v. Newell Cos., 13 U.S.P.Q.2d 1607, 1616 (E.D. Wis. 1988); Kori Corp. v. Wilco Marsh Buggies and Draglines Inc., 761 F.2d 649 (Fed. Cir. 1985).

295. Gen. Motors Corp. v. Devex Corp., 461 U.S. 648 (1983).

296. Beatrice Foods Co. v. New England Printing & Lith. Co., 923 F.2d 1567 (Fed. Cir. 1991).

297. United States v. Imperial Food Imports, 834 F.2d 1013 (Fed. Cir. 1987).

298. Electro Sci. Indus. v. Gen. Scanning, Inc., 247 F.3d 1341, 1354 (Fed. Cir. 2001).

monetary interest, is simply compensation for the use or forbearance of money owed.[299]

The interest rate applied is within the discretion of the trial court and will not be disturbed unless the court abused its discretion.[300] In view of that, the specific rate of prejudgment interest and whether it should be compounded or uncompounded are matters left to the trial court. Thus, courts have awarded simple interest or interest compounded on a variable rate over different time periods, and have based the award on the prime rate, rates above prime, the state statutory rate, or Treasury bill rates. A court may also limit prejudgment interest, or deny it altogether, in certain circumstances.[301] However, a court's justification for limiting prejudgment interest must have some relationship to its award.[302]

Prejudgment interest is compensatory and cannot be applied to the punitive portion of a damage award.[303] Accordingly, prejudgment interest itself cannot be trebled, nor can there be prejudgment interest on the increased portion of treble damages.[304]

3. *Enhancing damages—35 U.S.C. § 284*

Under 35 U.S.C. § 284, the trial court is required to award damages adequate to compensate for any infringement and is authorized, in its discretion, to treble the compensatory damages. It is for the court to determine whether and to what extent to increase the damages award, considering the totality of the circumstances.[305]

Enhancement of damages under 35 U.S.C. § 284 involves two steps: first, the fact finder must determine that the infringer engaged in culpable conduct, and second, the court must exercise its discretion to

---

299. Transmatic, Inc. v. Gulton Indus., Inc., 180 F.3d 1343, 1347 (Fed. Cir. 1999).

300. Crystal Semiconductor Corp. v. Tritech Microelectronics Int'l, Inc., 246 F.3d 1336, 1346 (Fed. Cir. 2001).

301. *Devex Corp.*, 461 U.S. at 656–57 (holding that it may be appropriate to limit prejudgment interest where the patent owner has been responsible for undue delay in prosecuting the lawsuit).

302. Group One, Ltd. v. Hallmark Cards, Inc., 407 F.3d 1297, 1308 (Fed. Cir. 2005).

303. *Beatrice Foods*, 923 F.2d 1567.

304. Lam, Inc. v. Johns-Manville Corp., 718 F.2d 1056 (Fed. Cir. 1983); Underwater Devices, Inc. v. Morrison-Knudsen Co., 717 F.2d 1380 (Fed. Cir. 1983).

305. Jurgens v. CBK, Ltd., 80 F.3d 1556, 1570 (Fed. Cir. 1996).

determine whether and to what extent to enhance the damages.[306] In exercising its discretion, the trial court may consider the evidence of the infringer's culpability in light of the factors set forth in *Read Corp. v. Portec, Inc.*,[307] summarized as follows: (1) whether the infringer deliberately copied the ideas or design of another; (2) whether the infringer, when it knew of the other's patent protection, investigated the scope of the patent and formed a good-faith belief that the patent was invalid or that it was not infringed; (3) the infringer's behavior as a party to the litigation; (4) the infringer's size and financial condition; (5) the closeness of the case; (6) the duration of the infringer's misconduct; (7) any remedial action by the infringer; (8) the infringer's motivation for harm; and (9) whether the infringer attempted to conceal its misconduct.[308] The court has discretion to identify and balance the most relevant factors so as to effectuate the punitive and deterrent purposes of enhanced damages and to fashion a just remedy.[309]

An act of willful infringement satisfies the culpability requirement and is sufficient to meet the first requirement to increase a compensatory damages award.[310] However, because of the trial court's broad discretion, a finding of willful infringement authorizes but does not mandate an award of increased damages.[311] The paramount determination is the egregiousness of the defendant's conduct based on all the facts and circumstances.[312]

Increased damages also may be awarded to a party because of the opposing party's bad faith.[313]

4. *Attorneys' fees—35 U.S.C. § 285*

Under 35 U.S.C. § 285, the trial court is charged with the determination of whether a party's conduct is exceptional and whether attorneys' fees should be awarded ("The court in exceptional cases may award rea-

306. *Id.*

307. 970 F.2d 816, 827 (Fed. Cir. 1992).

308. John Hopkins Univ. v. CellPro, Inc., 152 F.3d 1342, 1352 (Fed. Cir. 1998).

309. SRI Int'l, Inc. v. Advanced Tech. Labs., Inc., 127 F.3d 1462, 1468–1469 (Fed. Cir. 1997).

310. Read Corp. v. Portec, Inc., 970 F.2d 816, 827 (Fed. Cir. 1992).

311. Harris Corp. v. Ericsson Inc., 417 F.3d 1241, 1259 (Fed. Cir. 2005).

312. Cybor Corp. v. FAS Techs., 138 F.3d 1448, 1461 (Fed. Cir. 1998); *see also In re* Seagate Tech. LLC, 497 F.3d 1360 (Fed. Cir. 2007).

313. King Instruments Corp. v. Perego, 65 F.3d 941, 947 (Fed. Cir. 1995).

sonable attorney fees to the prevailing party."). First, the trial court must determine whether a case is exceptional, which is a factual determination reviewed for clear error. Second, the court must determine whether attorneys' fees are appropriate, a determination reviewed for abuse of discretion.[314] Federal Circuit law governs the court's determination as to whether a case is "exceptional" under § 285.

The purpose of § 285 is twofold: (1) to permit an award of fees where it would be grossly unjust that the winner be left to bear the burden of its own counsel, something prevailing litigants normally bear; and (2) to deter parties from bringing bad-faith litigation.[315]

Any claim to attorneys' fees must be processed in compliance with Federal Rule of Civil Procedure 54(d)(2).[316] Under Rule 54(d)(2), the motion for attorneys' fees must: (1) be filed no later than fourteen days after entry of judgment; (2) specify the judgment and the statute, rule, or other grounds entitling the moving party to the award; and (3) state the amount or provide a fair estimate of the amount sought.

The trial court has broad discretion in determining whether to award attorneys' fees.[317] The court can weigh intangible as well as tangible factors when determining an award, including: the degree of culpability of the infringer; the closeness of the question; litigation behavior; and any other factors whereby fee shifting may serve as an instrument of justice.[318] Whether a case is exceptional depends on findings of fact. Situations where the prevailing party may prove the existence of an exceptional case include the following: fraud or inequitable conduct in procuring the patent; litigation misconduct; vexatious, unjustified, or otherwise bad faith litigation; conduct that violates Federal Rule of Civil Procedure 11; a frivolous suit or willful infringement; or like infractions.[319]

While a finding of willful infringement is legally sufficient to meet the criterion of an "exceptional case," the trial court in its discretion

---

314. Phonometrics, Inc. v. Westin Hotel Co., 350 F.3d 1242 (Fed. Cir. 2003).

315. Mathis v. Spears, 857 F.2d 749, 753–54 (Fed. Cir. 1988) (holding that attorneys' fees under § 285 are available deterrents to blatant, blind, willful infringement of valid patents).

316. IPXL Holdings, L.L.C. v. Amazon.com, Inc., 430 F.3d 1377, 1386 (Fed. Cir. 2005).

317. nCube Corp. v. SeaChange Int'l, Inc., 436 F.3d 1317, 1325 (Fed. Cir. 2006).

318. Juicy Whip, Inc. v. Orange Bang, Inc., 382 F.3d 1367, 1373 (Fed. Cir. 2004).

319. Epcon Gas Sys., Inc. v. Bauer Compressors, Inc., 279 F.3d 1022, 1034 (Fed. Cir. 2002).

does not have to award attorneys' fees.[320] However, the general rule is that the trial court must normally explain why it decides that a case is not exceptional under 35 U.S.C. § 285 when a factual finding of willful infringement has been established, and, if exceptional, why it decides not to award attorneys' fees.[321]

Absent misconduct by the patentee in the litigation or in securing the patent, a trial court may only sanction the patentee if the litigation is both brought in subjective bad faith and is objectively baseless.[322] There is a presumption that the assertion of infringement of a duly granted patent is made in good faith.[323] Thus, the underlying improper conduct and the characterization of the case as exceptional must be established by clear and convincing evidence.[324]

D. Injunctions

Pursuant to 35 U.S.C. § 283, the court is empowered to "grant injunctions in accordance with the principles of equity to prevent the violation of any right secured by patent, on such terms as the court deems reasonable." The same standards are applied in hearing and granting injunctive relief in patent cases as are applied in other federal cases.[325] The decision to grant or deny permanent injunctive relief is an act of equitable discretion by the court, reviewable on appeal for abuse of discretion.[326]

Permanent injunctions should not issue automatically following a finding of infringement. Upon the finding that a valid patent is infringed, patent holders must demonstrate, through four equitable factors, the fairness of a permanent injunction on a case-by-case basis.[327] In *eBay Inc. v. MercExchange LLC*, the Supreme Court overturned the Federal Circuit's "general rule" that a patentee is presumptively entitled to a permanent injunction upon a finding of infringement at

---

320. Modine Mfg. Co. v. Allen Group, Inc., 917 F.2d 528 (Fed. Cir. 1990).

321. Transclean Corp. v. Bridgewood Servs., 290 F.3d 1364, 1379 (Fed. Cir. 2002).

322. Prof'l Real Estate Investors v. Columbia Pictures Indus., 508 U.S. 49, 60–61 (1993); Serio-US Indus. v. Plastic Recovery Techs. Corp., 459 F.3d 1311, 1321–22 (Fed. Cir. 2006).

323. Springs Willow Fashions, LP v. Novo Indus., LP, 323 F.3d 989, 999 (Fed. Cir. 2003).

324. Brooks Furniture Mfg. v. Dutailier Int'l, Inc., 393 F.3d 1378, 1382 (Fed. Cir. 2005).

325. Atlas Powder Co. v. Ireco Chems., 773 F.2d 1230, 1233 (Fed. Cir. 1985).

326. eBay Inc. v. MercExchange LLC, 126 S. Ct. 1837, 1839 (2006).

327. *eBay Inc.*, 126 S. Ct. 1837.

trial.[328] The Court stated that in determining whether to grant a permanent injunction, rather than applying an "automatic" injunction rule, courts should adhere to "well-established principles of equity."[329] In particular, a plaintiff seeking such an injunction must demonstrate that (1) irreparable injury is likely to occur to plaintiff absent an injunction; (2) remedies available at law, such as monetary damages, would be insufficient to compensate for the injury; (3) the balance of the hardships that would respectively be suffered by the plaintiff and the defendant militates toward granting the injunction; and (4) the public interest would not be disserved by a permanent injunction.[330] Prior to the *eBay* ruling, patent holders enjoyed an almost automatic right to injunctive relief upon the finding that a valid patent was infringed.[331]

Injunctions should follow the dictates of Federal Rule of Civil Procedure 65(d), which states that "every order granting an injunction and every restraining order shall set forth the reasons for its issuance, shall be specific in terms, [and] shall describe in reasonable detail . . . the act or acts sought to be restrained." An injunctive order runs afoul of Rule 65 when it does not use specific terms or describe in reasonable detail the acts sought to be restrained, and when it does not limit its prohibition to the manufacture, use, or sale of the specific infringing devices, or to those no more than colorably different from the infringing devices.[332] Thus, although a trial court is given broad discretion in shaping equitable decrees, injunctive relief should be narrowly tailored to fit the specific legal violations at hand.[333]

---

328. *Id.*

329. *Id.* at 1839.

330. *Id.*

331. *See, e.g.*, Fuji Photo Film Co. v. Jazz Photo Corp., 394 F.3d 1368, 1380 (Fed. Cir. 2005) ("Generally an injunction will issue when infringement has been adjudged, absent a sound reason for denying it.").

332. Oakley, Inc. v. Sunglass Hut Int'l, 316 F.3d 1331, 1346 (Fed. Cir. 2003).

333. Gemveto Jewelry Co. v. Jeff Cooper, Inc., 800 F.2d 256, 259 (Fed. Cir. 1986).

Blank pages inserted to preserve pagination when printing double-sided copies.

Chapter 13: The Appeal[334]

A. Federal Circuit Jurisdiction

1. Cases "arising under the patent laws"

The U.S. Court of Appeals for the Federal Circuit has exclusive jurisdiction on any appeal from a U.S. district court that had jurisdiction, in whole or in part, based on 28 U.S.C. § 1338, except for cases that arise under the Copyright or Trademark Acts or deal with exclusive rights in mask works, and no other claims under § 1338(a) exist.[335] The district courts have original jurisdiction over any civil action arising under any act of Congress relating to patents, plant variety protection, copyrights, and trademarks; such jurisdiction is exclusive of the state courts in patent, plant variety protection, and copyright cases.[336] The Federal Circuit will apply its own law, and not regional circuit law, in determining its jurisdiction over any appeal.[337]

The Federal Circuit's jurisdiction is not limited to actions brought under title 35 of the U.S. Code, but includes actions that implicate or raise substantial questions under title 35.[338] Examples of substantial questions under title 35 include infringement;[339] whether the director of the Patent and Trademark Office violated the Administrative Procedure Act in applying Patent Cooperation Treaty rules and regulations;[340] vesting title to the U.S. government for inventions made in government labs;[341] mandamus claims related to attorneys' authority to practice

---

334. Ford F. Farabow, Jr., Finnegan, Henderson, Farabow, Garrett & Dunner, LLP, Washington, D.C.

335. 28 U.S.C. § 1295(a)(1) (2000); Phillips v. AWH Corp., 363 F.3d 1207, 1211 (Fed. Cir. 2004).

336. 28 U.S.C. § 1338(a) (2000); Pixton v. B&B Plastics, Inc., 291 F.3d 1324, 1326 (Fed. Cir. 2002).

337. Woodard v. Sage Prods., Inc., 818 F.2d 841, 844 (Fed. Cir. 1987) (en banc).

338. Univ. of W. Va., Bd. of Trustees v. VanVoorhies, 278 F.3d 1288, 1295 (Fed. Cir. 2002) (action involving breach-of-assignment agreement properly transferred from the regional circuit to the Federal Circuit because the dispute focused on whether specific applications were continuation-in-part (CIP) applications, which raised a question of substantive patent law).

339. U.S. Valves, Inc. v. Dray, 212 F.3d 1368, 1372 (Fed. Cir. 2000).

340. Helfgott & Karas, P.C. v. Dickenson, 209 F.3d 1328, 1334 (Fed. Cir. 2000); claims based on 42 U.S.C. § 5908.

341. Cedars-Sinai Med. Ctr. v. Watkins, 11 F.3d 1573, 1577–80 (Fed. Cir. 1993).

before the PTO;[342] and claims under 16 U.S.C. § 831r for reasonable compensation for patent infringement.[343]

a. Implication of federal patent law

The Supreme Court defined the boundaries of the exclusive jurisdiction provided to the federal district courts under § 1338(a) by construing the "arising under" language to be the same as the "arising under" language of the general federal-question jurisdiction provision of 28 U.S.C. § 1331.[344] Section 1338(a) jurisdiction "extend[s] only to those cases in which a well-pleaded complaint establishes either that federal patent law creates the cause of action or that the plaintiff's right to relief necessarily depends on resolution of a substantial question of federal patent law, in that patent law is a necessary element of one of the well-pleaded claims."[345] If a substantial question of patent law is necessary to determine a required element of a state-law cause of action, such as an unfair competition claim asserted against a patentee, then under § 1338(a), the case arises under the patent laws and federal jurisdiction is exclusive of the state courts.[346] However, as discussed in subsection A.l.b, below, a defendant's counterclaim alleging patent infringement does not create arising-under jurisdiction because it is not part of the plaintiff's well-pleaded complaint.[347]

If the federal patent law does not create the cause of action, subject-matter jurisdiction can still lie if "plaintiff's right to relief necessarily depends on resolution of a substantial question of federal patent law."[348] Thus, one must address what constitutes a "substantial question" of patent law.

---

342. Wyden v. Comm'r of Patents & Trademarks, 807 F.2d 934, 936–37 (Fed. Cir. 1986) (en banc).

343. Alco Standard Corp. v. Tenn. Valley Auth., 808 F.2d 1490, 1493–94 (Fed. Cir. 1986).

344. Christianson v. Colt Indus. Operating Corp., 486 U.S. 800, 808–09 (1988).

345. *Id.*

346. Hunter Douglas, Inc. v. Harmonic Design, Inc., 153 F.3d 1318, 1329 (Fed. Cir. 1998), *overruled in part on other grounds*, Midwest Indus., Inc. v. Karavan Trailers, Inc., 175 F.3d 1356, 1358–59 (Fed. Cir. 1999) (en banc).

347. Holmes Group, Inc. v. Vornado Air Circulation Sys., Inc., 535 U.S. 826, 829–30 (2002).

348. *Christianson*, 486 U.S. at 808–09.

The mere presence of a patent as relevant evidence to a claim does not by itself present a substantial issue of patent law.[349] Causes of action that have been deemed to raise a substantial question of patent law sufficient to satisfy the jurisdiction requirements of § 1338(a), are those that address (1) infringement; (2) patent validity; (3) patent enforceability; (4) inventorship issues; (5) attorneys' fees under 35 U.S.C. § 285; or (6) revival of unintentionally abandoned patent applications.[350]

b. Patent law defense does not "arise under"

Under the well-pleaded-complaint test for jurisdiction, the fact that a federal patent law defense might be implicated by a state-law cause of action is not conclusive of whether the action arises under the patent laws for purposes of jurisdiction under §§ 1338(a) and 1295(a)(1). Rather, under the well-pleaded-complaint rule, arising under jurisdiction is determined from the plaintiff's statement of his or her own claim "unaided by anything alleged in anticipation or avoidance of defenses which it is thought the defendant may interpose."[351] State courts are not precluded from consideration of evidence regarding patent validity or infringement as they may relate to a state-court action so long as the "case" is not one arising under the patent laws.[352] Similarly, the fact that factual findings relating to a state-law claim may implicate potential prospective federal patent law determinations in future actions does not make the cause of action arise under the patent laws.[353]

---

349. Bonzel v. Pfizer, 439 F.3d 1358, 1363 (Fed. Cir. 2006) (affirming dismissal for lack of subject-matter jurisdiction when breach of patent license action did not arise under the patent laws).

350. Hunter Douglas, Inc. v. Harmonic Design, Inc., 153 F.3d 1318, 1330 (Fed. Cir. 1998) (see cases cited therein), *overruled in part on other grounds*, Midwest Indus., Inc. v. Karavan Trailers, Inc., 175 F.3d 1356, 1358–59 (Fed. Cir. 1999) (en banc). *See also* Apotex, Inc. v. Thompson, 347 F.3d 1335, 1344 (Fed. Cir. 2003) (ruling that court had subject-matter jurisdiction over generic-drug manufacturer's claim against the FDA for not delisting patents from the Orange Book because generic's complaint included a claim against a pioneer drug manufacturer to delist its patents and that claim presented a claim under the patent laws despite fact that the court had previously ruled that the patent laws provided no private cause of action for delisting a patent from the Orange Book).

351. *Christianson*, 486 U.S. at 808–09.

352. Pratt v. Paris Gaslight & Coke Co., 168 U.S. 255, 259, 261 (1897).

353. Becher v. Contoure Labs., Inc., 279 U.S. 388, 391–92 (1929).

c. Patent claim is part of original complaint

Pursuant to 28 U.S.C. § 1295(a)(1), the Federal Circuit has jurisdiction over an appeal where the district court's jurisdiction was "in part" based on 28 U.S.C. § 1338. Accordingly, where a patent claim is joined with a state-law claim or other federal nonpatent claim in the complaint, the Federal Circuit will have jurisdiction over the entire appeal of the final judgment if the patent claims are adjudicated on the merits or dismissed with prejudice.[354]

d. Patent claim added by amendment

The Supreme Court has not yet decided whether an infringement claim added by an amendment to a complaint suffices to give the Federal Circuit jurisdiction.[355] Justice Stevens, in his concurring opinion in *Holmes*,[356] has nonetheless stated that because appellate jurisdiction is based on the circumstances existing at the time the notice of appeal is filed, amendments to a complaint that add patent infringement claims are included in the Federal Circuit's jurisdiction.[357]

The Federal Circuit has itself stated in another context that the determination of its appellate jurisdiction should be "viewed pragmatically at the time of the appeal."[358] The Federal Circuit has held that infringement claims added by an amended complaint created § 1338(a) arising under jurisdiction; the Federal Circuit has jurisdiction over such an appeal when the patent claim was not frivolous or asserted as a tactical maneuver attempting to manipulate appellate jurisdiction of the state-law claims.

---

354. Atari, Inc. v. JS&A Group, Inc., 747 F.2d 1422, 1429–30 (Fed. Cir. 1984) (en banc), *overruled on other grounds by* Nobelpharma AB v. Implant Innovations, Inc., 141 F.3d 1059, 1068 (Fed. Cir. 1998) (en banc); Amini Innovation Corp. v. Anthony California, Inc., 439 F.3d 1365, 1368 (Fed. Cir. 2006).

355. Holmes Group, Inc. v. Vornado Air Circulation Sys., Inc., 535 U.S. 826, 829 n.1 (2002).

356. *Id.*

357. *Id.* at 835 (Stevens, J., *concurring in part*); *see also* Christianson v. Colt Indus. Operating Corp., 486 U.S. 800, 823–24 (1988) (Stevens, J., concurring).

358. *Atari,* 747 F.2d at 1436 (en banc), *overruled on other grounds by Nobelpharma*, 141 F.3d at 1068 (en banc). *See also* Eaton Corp. v. Appliance Valves Corp., 790 F.2d 874, 876 n.3 (Fed. Cir. 1986).

e. Effect of dismissal

When a patent claim is dismissed without prejudice from the underlying suit but state-law causes of action remain, the case no longer arises under the patent laws and any appeal must go to the regional circuit.[359] If, however, the district court dismisses the patent claims with prejudice, then the arising under jurisdiction remains in effect and any appeal of that decision or final judgment of the remaining claims goes to the Federal Circuit, because the dismissal with prejudice constitutes an adjudication on the merits.[360]

f. Mootness

An Article XI case or controversy must exist at all stages of appellate review.[361] "[A] case becomes moot if, through the action of the party seeking review, the immediate controversy is terminated."[362]

2. *Jurisdiction over other claims brought with patent claim*

a. Supplemental jurisdiction—28 U.S.C. § 1367

Pursuant to 28 U.S.C. § 1367(a), "in any civil action over which the district courts have original jurisdiction, the district courts shall have supplemental jurisdiction over all other claims that are so related to claims in the action within such original jurisdiction that they form part of the same case or controversy under Article III of the United States Constitution," including "claims that involve the joinder or intervention of additional parties." Under this statute, a district court may exercise supplemental jurisdiction over a state-law claim if the court can exercise original jurisdiction over some other federal claim also contained within the lawsuit that is related to the state-law claim.[363] Thus, for example, the Federal Circuit held that a district court that had original jurisdiction based on patent law claims also had supplemental jurisdiction over state-law claims for breach of contract and misappropriation of trade secrets that "form[ed] part of the same case or controversy."[364]

---

359. Nilssen v. Motorola, Inc., 203 F.3d 782, 784–85 (Fed. Cir. 2000).
360. Zenith Elecs. Corp. v. Exzec, Inc., 182 F.3d 1340, 1346 (Fed. Cir. 1999).
361. Aqua Marine Supply v. AIM Machining, Inc., 247 F.3d 1216, 1219 (Fed. Cir. 2001).
362. *Id.* at 1220.
363. Mars Inc. v. Kabushiki-Kaisha Nippon Conlux, 24 F.3d 1368, 1374 (Fed. Cir. 1994).
364. Crater Corp. v. Lucent Techs., Inc., 255 F.3d 1361, 1369–70 (Fed. Cir. 2001).

The exercise of supplemental jurisdiction under 28 U.S.C. § 1367(a) is not compulsory. District courts have the discretion to refuse to exercise supplemental jurisdiction under § 1367(c) if (1) the claim raises a novel or complex issue of state law; (2) the claim substantially predominates over the claim or claims over which the district court had original jurisdiction; (3) the district court has dismissed all claims over which it has original jurisdiction; or (4) there are other compelling reasons for declining jurisdiction.

b. Supplemental jurisdiction over foreign patent claims

Traditionally, district courts lack subject-matter jurisdiction to hear infringement claims based on acts committed in foreign countries that are alleged to infringe foreign patents.[365] However, in some cases, the doctrine of supplemental jurisdiction may provide a basis to hear such claims when asserted in a suit that raises claims of infringement of a U.S. patent. Whether a district court will exercise supplemental jurisdiction over an infringement claim involving a foreign patent will depend on whether the acts of infringement of the foreign patent are sufficiently related to the acts of infringement of the U.S. patent at issue in the suit. If the acts of foreign infringement are based on an accused product or process different from the product or process accused of infringing the U.S. patent, supplemental jurisdiction likely will not be proper.[366]

In affirming a denial of a preliminary injunction seeking to enjoin the patentee from pursuing an infringement action in Great Britain based on British patents alleged to correspond to U.S. patents, the Federal Circuit also suggested that considerations of international comity, the "Act of State" doctrine, and principles of abstention might preclude a district court from exercising supplemental jurisdiction pursuant to 28 U.S.C. § 1367(c).[367]

c. Unfair competition claims—28 U.S.C. § 1338(b)

Reliance on the supplemental jurisdiction provision of 28 U.S.C. § 1367 is not necessary when unfair competition claims that relate to a claim

---

365. *Mars,* 24 F.3d at 1373 (ruling that "a claim of infringement of a foreign patent does not constitute a claim of unfair competition within the meaning of section 1338(b)").

366. *Id.* at 1374.

367. Stein Assocs. v. Heat & Control, Inc., 748 F.2d 653, 658 (Fed. Cir. 1984).

of patent infringement are asserted. Section 1338(b) expressly provides that "[t]he district courts shall have original jurisdiction of any civil action asserting a claim of unfair competition *when joined with a substantial and related claim* under the copyright, *patent*, plant variety protection or trademark laws" (emphasis added). Congress permitted joinder of a state unfair competition claim with a federal patent infringement claim under § 1338(b) in order to avoid "piecemeal litigation."[368]

d. Patent infringement counterclaims

A defendant's counterclaim alleging patent infringement does not create arising under jurisdiction in the district court (and therefore no appellate jurisdiction for the Federal Circuit) because it is not part of the plaintiff's well-pleaded complaint.[369] Where only such claims remain in a case, or no patent claim was ever asserted in the original complaint, the Federal Circuit would have to transfer the appeal to the appropriate regional circuit.[370]

e. Patent declaratory judgment claims

The Federal Circuit looks only to the well-pleaded complaint to determine subject-matter jurisdiction in the court below.[371] If an accused infringer's complaint asserts a declaratory judgment claim of noninfringement, invalidity, or unenforceability of a patent, such actions are considered ones seeking coercive relief under the patent laws that will confer appellate jurisdiction on the Federal Circuit.[372]

---

368. *Mars*, 24 F.3d at 1372.

369. Holmes Group, Inc. v. Vornado Air Circulation Sys., Inc., 535 U.S. 826, 829–30 (2002).

370. *Id. Holmes* creates the possibility that a patent infringement counterclaim could be adjudicated in a state court proceeding. *Cf.* Green v. Hendrickson Publishers, Inc., 770 N.E.2d 784, 793, 63 U.S.P.Q.2d 1852, 1858 (Ind. 2002) (following *Holmes* to allow a claim for copyright infringement to stay in state court when it was asserted as a counterclaim to plaintiffs' claim for breach of contract relating to a copyright license).

371. *Holmes*, 535 U.S. at 829–30.

372. *See, e.g.*, Golan v. Pingel Enter., Inc., 310 F.3d 1360, 1366–67 (Fed. Cir. 2002) (holding complaint sought declarations of patent noninfringement that arose, in part, under 28 U.S.C. § 1338); Unitherm Food Sys., Inc. v. Swift-Eckrich, Inc., 375 F.3d 1341, 1348 (Fed. Cir. 2004) (exercising jurisdiction over appeal of accused infringer's antitrust claim and state-law claims for tortious interference where accused infringer also brought a claim for a declaratory judgment of invalidity and unenforceability).

The Federal Circuit applies the well-pleaded complaint rule "not to the declaratory judgment complaint, but to the hypothetical action that the declaratory judgment defendant would otherwise have brought directly against the declaratory judgment plaintiff."[373] After constructing such a hypothetical complaint, the Federal Circuit has "to determine both under which federal statute(s) the hypothetical cause of action would have 'aris[en],' and whether those federal statute(s) 'relat[e] to' patents."[374]

The presence of a declaratory judgment claim dismissed without prejudice for lack of subject-matter jurisdiction should not support arising under jurisdiction for an appeal of any other claims asserted with the declaratory judgment claim.[375] However, if an accused infringer appeals the dismissal of its declaratory judgment claims for lack of subject-matter jurisdiction, that appeal will lie in the Federal Circuit.[376]

f. No jurisdiction over ownership or licensing disputes

The Federal Circuit does not have exclusive jurisdiction over patent-related actions that may arise in state court or in federal court based on diversity jurisdiction, e.g., actions for breach of licensing agreements.[377] Conversely, the fact that the accused infringer sets up a defense of license that would require an analysis of state contract law will not defeat subject-matter jurisdiction when the complaint alleges patent infringement.[378]

---

373. Cedars-Sinai Med. Ctr. v. Watkins, 11 F.3d 1573, 1578 (Fed. Cir. 1993).

374. *Id.* The Federal Circuit affirmed the dismissal of plaintiffs' declaratory judgment complaint for lack of subject-matter jurisdiction, and one not arising under § 1338(a), because declaratory judgment defendant's well-pleaded complaint would have been one to recover money due under a contract to transfer ownership of a patent, a matter of state law, and declaratory judgment plaintiffs' patent claims only related to possible defenses to that state-law action. Speedco, Inc. v. Estes, 853 F.2d 909, 912–13 (Fed. Cir. 1988).

375. *See* Hunter Douglas, Inc. v. Harmonic Design, Inc., 153 F.3d 1318, 1328 (Fed. Cir. 1998).

376. Gen-Probe Inc. v. Vysis, Inc., 359 F.3d 1376, 1379–82 (Fed. Cir. 2004).

377. *In re* Oximetrix, Inc., 748 F.2d 637, 641–42 (Fed. Cir. 1984); for a determination of patent ownership, *see* Beghin-Say, Int'l, Inc. v. Ole-Bendt Rasmussen, 733 F.2d 1568, 1571–72 (Fed. Cir. 1984).

378. Pixton v. B&B Plastics, Inc., 291 F.3d 1324, 1327 (Fed. Cir. 2002).

g. Transfer of appeals to regional circuit

If the Federal Circuit decides it lacks subject-matter jurisdiction over an appeal, the court can transfer the appeal to the regional circuit, which could exercise jurisdiction over the appeal pursuant to 28 U.S.C. § 1631.

3. *Finality requirement*

a. Final decision rule

The "final decision" requirement of 28 U.S.C. § 1295(a)(1) is coextensive with the final decision requirement of 28 U.S.C. § 1291, governing appeals to other federal courts of appeal.[379]

b. Final but for an accounting—28 U.S.C. § 1292(c)(2)

Under 28 U.S.C. § 1292(c)(2), the Federal Circuit has jurisdiction to review a patent infringement judgment that is final except for an accounting of damages.[380] "Accounting" as used in 28 U.S.C. § 1292(c)(2) refers only to infringement damages pursuant to 35 U.S.C. § 284.[381]

c. Final but for an award of attorneys' fees or costs

Ordinarily an infringement judgment will not lack finality simply because the district court has not yet calculated the amount of attorneys' fees it will award.[382] However, if the parties are specifically appealing only the issue of the award of attorneys' fees, then an order that awards fees but does not determine the amount of those fees is a nonfinal order.[383]

d. Rule 54(b) certification

When an appeal is certified pursuant to Federal Rule of Civil Procedure 54(b), the Federal Circuit reviews the finality of the judgment de novo in order to ensure that it has jurisdiction to hear the appeal.[384]

---

379. Johannsen v. Pay Less Drug Stores Nw., Inc., 918 F.2d 160, 161 n.1 (Fed. Cir. 1990).
380. *Id.* at 162.
381. Special Devices, Inc. v. OEA, Inc., 269 F.3d 1340, 1343 n.2 (Fed. Cir. 2001).
382. *Johannsen*, 918 F.2d at 164.
383. *Special Devices*, 269 F.3d at 1345–46.
384. Ultra-Precision Mfg. Ltd. v. Ford Motor Co., 338 F.3d 1353, 1356 (Fed. Cir. 2003).

e. Injunctions and stay orders

The Federal Circuit has exclusive jurisdiction to review interlocutory orders granting, continuing, modifying, refusing, or dissolving injunctions, or refusing to dissolve or modify injunctions in cases arising under the patent laws pursuant to 28 U.S.C. §§ 1292(a)(1) and (c)(1), except where direct review may be had in the Supreme Court.[385] When an interlocutory order effectively denies injunctive relief (e.g., the dismissal of an infringement counterclaim that sought an injunction), the Federal Circuit generally will not exercise its subject-matter jurisdiction unless the party seeking appeal shows that serious or irreparable harm will result if the appeal is not immediately heard.[386]

If the district court's jurisdiction over a claim for patent infringement was based in part on 28 U.S.C. § 1338(a), the Federal Circuit will have jurisdiction under § 1292(c)(1) to hear an appeal of a preliminary injunction entered on nonpatent issues, such as copyright infringement.[387] An interlocutory order that ordinarily would not be appealable may be given discretionary appellate review when it is ancillary to other matters that are appealable when it would promote judicial economy and advance the interest of justice.[388]

Stay orders are generally not final for purposes of 28 U.S.C. § 1295.[389]

f. Certified questions

Section 1292(c)(1), title 28 of the U.S. Code, gives the Federal Circuit jurisdiction to hear appeals of interlocutory orders, in a case arising under the patent laws, that satisfy the conditions of § 1292(b). Section 1292(b) permits appellate review of certain interlocutory orders that present a controlling question of law subject to a substantial difference of opinion, and whose resolution would materially advance the ultimate termination of the dispute, upon compliance with certain procedural requirements, including a certification by the district court.

---

385. Cross Med. Prods., Inc. v. Medtronic Sofamor Danek, Inc., 424 F.3d 1293, 1301 (Fed. Cir. 2005).

386. Woodard v. Sage Prods., Inc., 818 F.2d 841, 842 (Fed. Cir. 1987) (en banc).

387. Atari, Inc. v. JS&A Group, Inc., 747 F.2d 1422, 1429–30 (Fed. Cir. 1984) (en banc).

388. Katz v. Lear Siegler, Inc., 909 F.2d 1459, 1461 (Fed. Cir. 1990).

389. Nystrom v. Trex Co., Inc., 339 F.3d 1347, 1351 (Fed. Cir. 2003).

Even if the district court certifies the appeal in accordance with the requirements of § 1292(b), the decision by the Federal Circuit to accept such an appeal is entirely discretionary.[390] "[S]uch appeals are rarely granted."[391] When an order is certified under § 1292(b), the Federal Circuit may review the entire order, not just the specific questions certified by the district court.[392]

Procedurally, a party seeking an interlocutory appeal in the Federal Circuit under §§ 1292(b) and (c)(1) must file in the Federal Circuit a "petition for permission to appeal" within the ten-day time limit of § 1292(b). Under Federal Rule of Appellate Procedure 5(d)(2), "notice of appeal" is not required. The specific requirements for the content of the petition are set forth in Appellate Rule 5(b)(1).

In general, the Federal Circuit does not exercise general supervisory authority over district court judges. Accordingly, the Federal Circuit may not issue mandamus on the basis of inherent supervisory authority of administrative matters of the district court, as the regional circuit court of appeals may do.[393] The Federal Circuit will only entertain petitions for writs of mandamus in patent cases in which "the patent jurisprudence of this court plays a significant role."[394]

B. Standards of Review

Questions of law reviewed de novo by the Federal Circuit include claim construction,[395] prosecution history estoppel,[396] obviousness,[397] enablement,[398] indefiniteness,[399] inventorship,[400] priority,[401] concep-

390. *Ultra-Precision*, 338 F.3d at 1357–58.

391. *Nystrom*, 339 F.3d at 1351.

392. Senza-Gel Corp. v. Seiffhart, 803 F.2d 661, 668 (Fed. Cir. 1986).

393. *In re* Oximetrix, Inc., 748 F.2d 637, 643 (Fed. Cir. 1984).

394. *In re* Innotron Diagnostics, 800 F.2d 1077, 1083–84 (Fed. Cir. 1986).

395. Cybor Corp. v. FAS Techs., Inc., 138 F.3d 1448, 1456 (Fed. Cir. 1998) (en banc).

396. Honeywell Int'l, Inc. v. Hamilton Sunstrand Corp., 370 F.3d 1131, 1139 (Fed. Cir. 2004) (en banc).

397. Riverwood Int'l Corp. v. Mead Corp., 212 F.3d 1365, 1366 (Fed. Cir. 2000).

398. Invitrogen Corp. v. Clontech Labs, Inc., 429 F.3d 1052, 1070 (Fed. Cir. 2005).

399. IPXL Holdings, L.L.C. v. Amazon.com, Inc., 430 F.3d 1377, 1380 (Fed. Cir. 2005).

400. Board of Educ. v. Am. Bioscience, Inc., 333 F.3d 1330, 1337 (Fed. Cir. 2003).

401. Innovative Scuba Concepts, Inc. v. Feder Indus., Inc., 26 F.3d 1112, 1115 (Fed. Cir. 1994).

tion,[402] reduction to practice,[403] the availability of lost profits,[404] and Noerr-Pennington immunity.[405]

Questions of fact reviewed under the clearly erroneous rule (for a bench trial) or under the substantial evidence test (for issues in a jury trial) include infringement,[406] utility,[407] anticipation,[408] best mode,[409] written description,[410] materiality and intent,[411] patent misuse,[412] the amount of reasonable royalty damages,[413] the amount of lost profits,[414] willfulness,[415] and an exceptional case determination.[416]

In the case of obviousness, the district court's fact findings underlying the obviousness conclusion are reviewed for clear error (or substantial evidence in a jury trial).[417] The same is true for the fact findings underlying other legal determinations, such as enablement,[418] and priority, conception, and reduction-to-practice determinations.[419]

The Federal Circuit uses an abuse-of-discretion standard to review an inequitable conduct determination,[420] the methodology used to calculate lost profits[421] and reasonable royalties,[422] an award of attorneys' fees,[423] and the grant or denial of an injunction.[424]

---

402. *Invitrogen Corp.*, 429 F.3d at 1063.
403. Fujikawa v. Wattanasin, 93 F.3d 1559, 1564 (Fed. Cir. 1996).
404. Micro Chem., Inc. v. Lextron, Inc., 318 F.3d 1119, 1122 (Fed. Cir. 2003).
405. Nobelpharma AB v. Implant Innovations, Inc., 141 F.3d 1059, 1068 (Fed. Cir. 1998) (en banc).
406. Golden Blount, Inc. v. Robert H. Peterson Co., 438 F.3d 1354, 1359 (Fed. Cir. 2006).
407. Brooktree Corp. v. Advanced Micro Devices, Inc., 977 F.2d 1555, 1571 (Fed. Cir. 1992).
408. Sentry Prot. Prods., Inc. v. Eagle Mfg. Co., 400 F.3d 910, 914 (Fed. Cir. 2005).
409. Minco Inc. v. Combustion Eng'g Inc., 95 F.3d 1109, 1115 (Fed. Cir. 1996).
410. Koito Mfg. Co., Ltd. v. Turn-Key-Tech, LLC, 381 F.3d 1142, 1149 (Fed. Cir. 2004).
411. Purdue Pharma L.P. v. Endo Pharms., Inc., 438 F.3d 1123, 1129 (Fed. Cir. 2006).
412. Windsurfing Int'l, Inc. v. AMF, Inc., 782 F.2d 995, 1001–02 (Fed. Cir. 1986).
413. Unisplay S.A. v. Am. Elec. Sign Co., 69 F.3d 512, 517 (Fed. Cir. 1995).
414. Vulcan Eng'g Co., Inc. v. Fata Aluminum, Inc., 278 F.3d 1366, 1376 (Fed. Cir. 2002).
415. *Golden Blount*, 438 F.3d at 1359–60.
416. Cybor Corp. v. FAS Techs., Inc., 138 F.3d 1448, 1459 (Fed. Cir. 1998) (en banc).
417. *Vulcan Eng'g*, 278 F.3d at 1372.
418. Plant Genetic Sys., N.V. v. DeKalb Genetics Corp., 315 F.3d 1335, 1339 (Fed. Cir. 2003).
419. Hitzeman v. Rutter, 243 F.3d 1345, 1353 (Fed. Cir. 2001).
420. *Purdue Pharma*, 438 F.3d at 1129.
421. Micro Chem., Inc. v. Lextron, Inc., 318 F.3d 1119, 1122 (Fed. Cir. 2003).

C. Governing Law

The Federal Circuit has held that, for all substantive issues of patent law that are within its exclusive jurisdiction, it will apply its own law as binding authority.[425] However, the Federal Circuit applies regional circuit law to procedural issues so long as they do not (1) pertain to patent law; (2) bear an essential relationship to matters committed to its exclusive control by statute; or (3) clearly implicate the jurisprudential responsibilities of the Federal Circuit in a field within its exclusive jurisdiction.[426]

The Federal Circuit has adopted the precedents of the U.S. Court of Customs and Patent Appeals and the U.S. Court of Claims as binding precedents on the court.[427]

D. Remand

A change in the claim construction at the appellate level generally necessitates a remand to the district court to resolve any new factual issues raised by the new claim construction.[428] Nonetheless, if the evidence submitted by the patentee during trial was insufficient to prove infringement under the proper claim construction, and the patentee had notice of the claim construction being advocated by the alleged infringer, then reversal, not remand, is warranted.[429]

---

422. SmithKline Diagnostics, Inc. v. Helena Labs. Corp., 926 F.2d 1161, 1164 (Fed. Cir. 1991).

423. Cybor Corp. v. FAS Techs., Inc., 138 F.3d 1448, 1459 (Fed. Cir. 1998) (en banc).

424. Oakley, Inc. v. Sunglass Hut Int'l, 316 F.3d 1331, 1339 (Fed. Cir. 2003).

425. Golan v. Pingel Enter., Inc., 310 F.3d 1360, 1368 (Fed. Cir. 2002).

426. Int'l Nutrition Co. v. Horphag Research Ltd., 257 F.3d 1324, 1328 (Fed. Cir. 2001).

427. South Corp. v. United States, 690 F.2d 1368, 1369–70 (Fed. Cir. 1982) (en banc).

428. Electra Scientific Indus., Inc. v. Dynamic Details, Inc., 307 F.3d 1343, 1350 (Fed. Cir. 2002).

429. CVI/Beta Ventures, Inc. v. Tura LP, 112 F.3d 1146, 1161–62 (Fed. Cir. 1997).

The Federal Judicial Center

Board
The Chief Justice of the United States, *Chair*
Judge Susan H. Black, U.S. Court of Appeals for the Eleventh Circuit
Judge David O. Carter, U.S. District Court for the Central District of California
Magistrate Judge Karen Klein, U.S. District Court for the District of North Dakota
Judge Loretta A. Preska, U.S. District Court for the Southern District of New York
Judge Philip M. Pro, U.S. District Court for the District of Nevada
Judge Stephen Raslavich, U.S. Bankruptcy Court for the Eastern District of Pennsylvania
Judge William B. Traxler, Jr., U.S. Court of Appeals for the Fourth Circuit
James C. Duff, Director of the Administrative Office of the U.S. Courts

Director
Judge Barbara J. Rothstein

Deputy Director
John S. Cooke

About the Federal Judicial Center

The Federal Judicial Center is the research and education agency of the federal judicial system. It was established by Congress in 1967 (28 U.S.C. §§ 620–629), on the recommendation of the Judicial Conference of the United States.

By statute, the Chief Justice of the United States chairs the Center's Board, which also includes the director of the Administrative Office of the U.S. Courts and seven judges elected by the Judicial Conference.

The organization of the Center reflects its primary statutory mandates. The Education Division plans and produces education and training programs for judges and court staff, including satellite broadcasts, video programs, publications, curriculum packages for in-court training, and Web-based programs and resources. The Research Division examines and evaluates current and alternative federal court practices and policies. This research assists Judicial Conference committees, who request most Center research, in developing policy recommendations. The Center's research also contributes substantially to its educational programs. The two divisions work closely with two units of the Director's Office—the Systems Innovations & Development Office and Communications Policy & Design Office—in using print, broadcast, and online media to deliver education and training and to disseminate the results of Center research. The Federal Judicial History Office helps courts and others study and preserve federal judicial history. The International Judicial Relations Office provides information to judicial and legal officials from foreign countries and assesses how to inform federal judicial personnel of developments in international law and other court systems that may affect their work.